Global Thinswitch®

CE IP41

US Patent Pending

Installation and Operating Instructions
Applies to TSW2222

General

The Thinswitch Limit Switch verifies ejector plate return when tied into the machine control. The switch protects the mold from premature closure after part ejection.

The Thinswitch can also be used with a bolt or pin actuator with a minimum diameter of 9.5mm. Care should be taken to avoid crushing the housing with the actuator.

The Global Thinswitch is designed to operate in conditions where occasional water or oil spray is present. Do not immerse the switch or subject it to direct, continuous liquid spray.

The Thinswitch® is designed for use in very low power mold protection control circuits. It is not intended to switch heavy loads in power applications such as relay or solenoid coils.

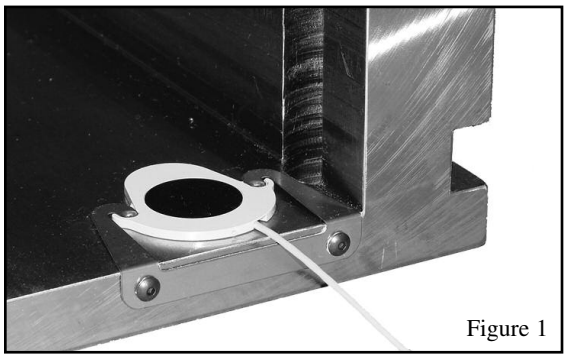

Figure 1

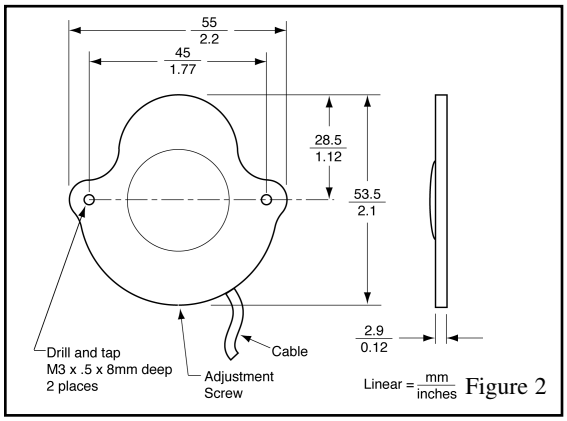

Figure 2

Installation

There are two different methods of installation:

a. with the mounting clip from the side of the mold base (Fig. 1)
b. attached from the top of the switch using 3mm screws

1. Check height of the rest buttons.

   If button height is less than 3mm, machine a pocket to accept the switch to match rest button height. The top of the dome covering the actuation spring should extend above the rest button. See Figure 4 for Actuation Height.

   If button height is 3mm, install without 1mm Spacer.

   If button height is 4mm, install 1mm Spacer under the Thinswitch.

2. Verify that any rest buttons on the ejector plate will not interfere with the switch,wire clips, or wire routing.

4. Drill and tap two mounting holes M3 x .5 x 8mm deep in the location of the switch or the mounting clip depending on your installation. (See Figures 2 and 5)

5. Using a voltmeter, verify switch contact operation before placing mold in service.

6. Install switch wiring in accordance with appropriate electrical standards. Wire switch directly to the injection molding machine controls or to an approved locking male plug. Consult the instruction manual for your injection molding press for proper switch contact location. Switch actuation is SPST. Black and White wires can be connected interchangeably.

7. When using the Mounting Clip, slide the Thinswitch under the clip as shown in Figure 1. Switch should snap securely into place.

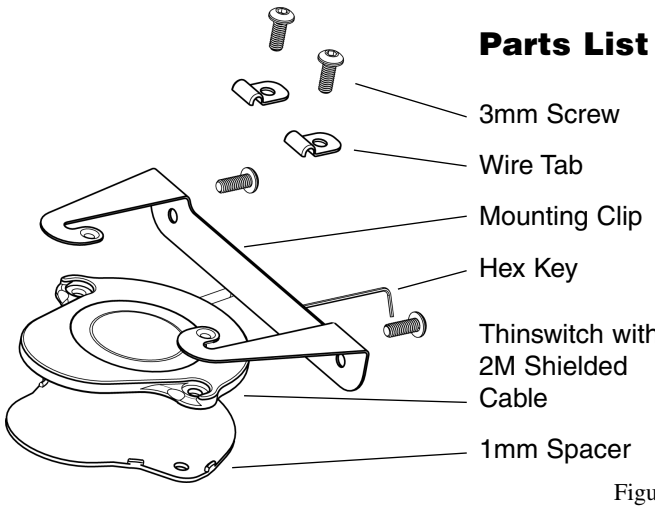

Figure 3

Operation

- The actuation height of the switch is adjusted by turning the set screw with included hex key (see Figures 2 and 3).
- Recommended actuation height:

	Min.	Max.
without 1mm Spacer	3.2mm	4.2mm
with 1mm Spacer	4.2mm	5mm

- Each 1/4 turn of the adjusting screw changes actuation height approximately .14mm.
- Adjust the actuation height to .25mm - .35mm before the end of the ejector plate stroke.

Premature spring and switch failure may result by adjusting the operating point more than .5mm before the end of the ejector plate stroke.

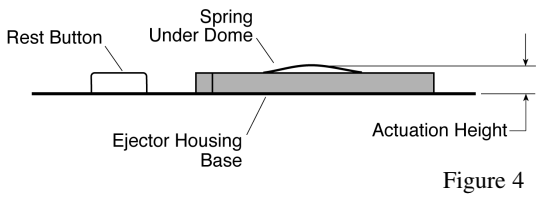

Figure 4

Specifications

Rated current is dependent upon operating temperature. A lower operating temperature allows more current safely through the Thinswitch®. See the table below for details.

Rated Current (Resistive) vs. Operating Temperature		
mAmps	°C	°F
100	29.4	85
90	49.0	120
80	68.3	155
70	79.4	175

Above rated current is resistive. Thinswitch is not intended for inductive load.

Switching Element Contacts

BeCu with Hard Gold Plating .....SPST

Component Materials

Body .....Fiberglass-Reinforced Nylon
Spring .....#301 Stainless Steel
Back Cover.....Polyester Film
Protective Dome.....Polyurethane
Wire Leads .....28ga stranded copper
2 conductor, shielded
cable, 2m long,
ends stripped and tinned

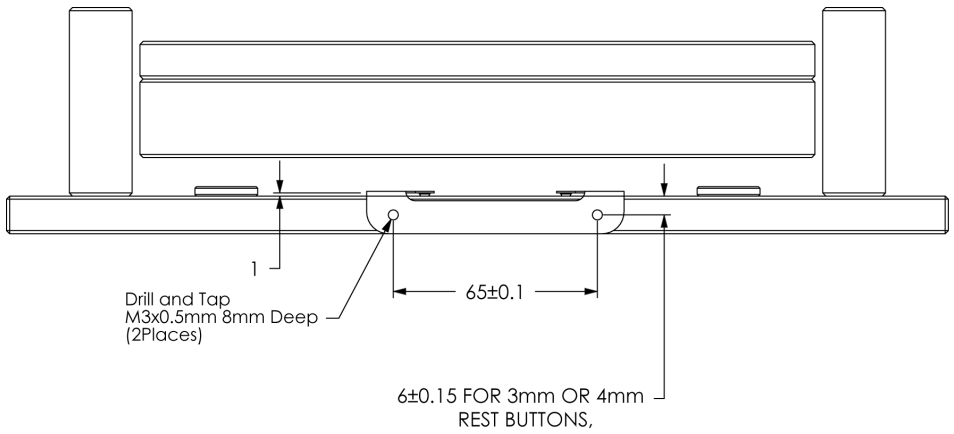

Figure 5

Limited Warranty

Seller warrants that this product supplied will conform to the description herein stated and that the product will be of standard quality. This is the sole warranty made by Seller with respect to this product. Seller expressly disclaims any other express or implied warranties, including, but not limited to, the implied warranty of merchantability and the implied warranty of fitness for a particular purpose.

Seller shall not be liable for any cost or damages, whether direct, incidental or consequential, including, but not limited to, any injury, loss or damage resulting from the use of this product, regardless of whether any claim for such cost or damages is based on warranty, contract, negligence, tort or strict liability. The sole liability of Seller is limited to repairing or replacing this product.

This warranty shall not apply to any products that have been repaired or altered by anyone other than Seller. The warranty shall not apply to any products subject to misuse due to common negligence or accident, nor to any products manufactured by Seller which are not installed or operated in accordance with the printed instructions of Seller or which have been operated beyond the rated capacity of the goods.