ME-0738-PS-006-B 09-08 HNL/PKS

HEATED NOZZLE LOCATOR

INSTALLATION DATA

Please read carefully before installing components.

A requirement for D-M-E split-plate designs, and recommended for all D-M-E runnerless molds, the new heated nozzle locator improves both the performance and structural integrity of D-M-E runnerless systems.
It provides uniform temperature control of resin from the machine nozzle to the distributor channel. The thermocouple-equipped coil heater features a square (or flat) cross section to improve heat tranfer to the core's 0.312 diameter feed channel.The heated nozzle locator provides quicker and easier systems start-ups, minimizes preesure loss and eliminates cold slugs in the feed channel. Available in two lengths with choice of 1/2" or3/4" spherical radius, the assemblies can be installed using either a clamp style or bolt thru style method for added design and construction versatility.

HEATED NOZZLE LOCATOR ASSEMBLIES

R	CATALOG NUMBER
1/2	HNL-462
	HNL-472
3/4	HNL-662
	HNL-672

HNL-462 and HNL-662 assemblies include:
- HNC-46 or HNC-66 core, respectively
- SSTC-62-90 heater
- HNS-67 spacer

HNL-472 and HNL-672 assemblies include:
- HNC-47 or HNC-67 core, respectively
- SSTC-72-90 heater
- HNS-67 spacer

HEATED NOZZLE LOCATOR REPLACEMENT PARTS

Note: Dimensions shown in Inches.

CORES

R	CAT. NO.
1/2	HNC-46
	HNC-47
3/4	HNC-66
	HNC-67

THERMOCOUPLE HEATERS

(240 VAC, T/C type J grounded, 34" leads)

CATLOG NUMBER	USED WITH CORES
SSTC-62-90	HNC-46&66
SSTC-72-90	HNC-47&67

SPACERS

CATALOG NUMBER
HNS-67

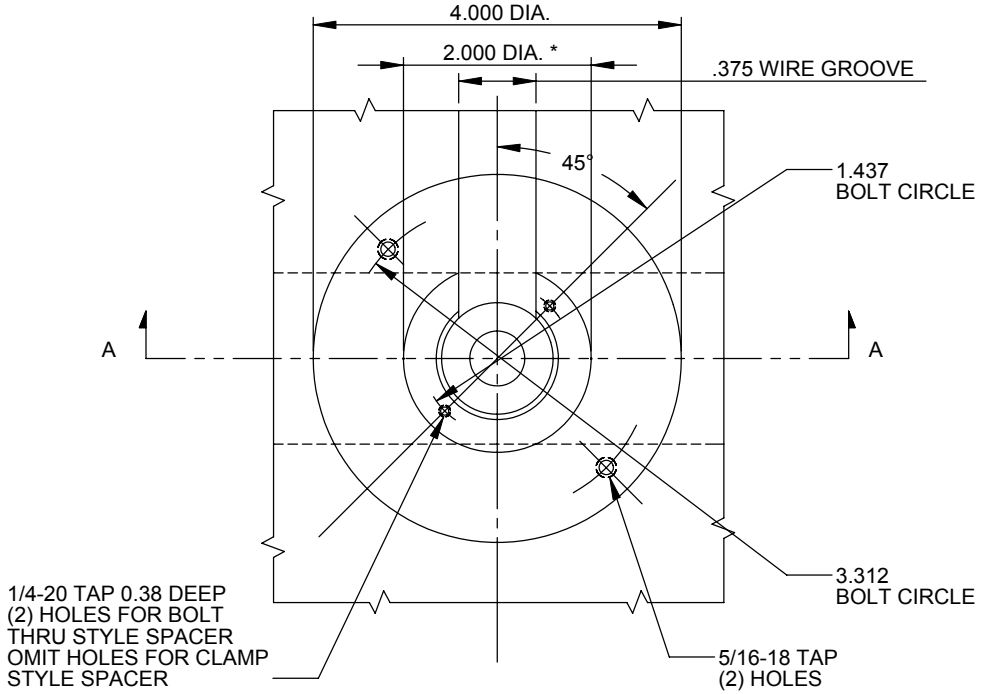

* APPLIES TO BOLT THRU STYLE APPLICATION ONLY.

SECTION A-A ON REVERSE SIDE (FIGURE 3)

IMPORTANT SAFETY INFORMATION

A hot-runner system includes electrical elements and may contain molten plastic at elevated temperature and pressure. To avoid injury, exercise caution by reading these instructions before servicing or operating the system.
These instructions must be passed on to the end user where they should be read before using this product. Failure to do so can result in serious injury or death.

⚠ DANGER

Failure to comply will result in serious injury or death:
ELECTRICAL HAZARDS
Improper voltages or grounding can result in electrical shock. Use only with proper voltage and a proper earth ground.
To avoid electrical shock, do not operate product when wet.
Do not operate this equipment with covers or panels removed.
To avoid electrical shock, turn off main power disconnect and lockout / tag out before servicing this device. Do not connect temperature sensors to electrical power. It will damage the product and it can cause fire, severe injuries or even death.
If green ground wire present wire must be connected to the ground.
Do not rebend rigid leads. Rebending leads might result in damage to circuit.
Product might absorb moisture when cool. Use low Voltage or power to drive out residual moisture before applying full power. Failure to do so may cause damage to this product.

⚠ WARNING

Failure to comply can result in serious injury or death:
STORED ENERGY AND HIGH TEMPERATURE HAZARDS
This product maintains molten plastic at high pressure. Use caution when operating and servicing the system.
Physical contact with molten plastic may result in severe burns. Proper protective equipment, including eye protection, must be worn. This product has heated surfaces. Use caution when operating and servicing the system to avoid severe burns. Proper protective equipment should be worn.

ME-0738-PS-006-B 08-09 HNL/PKS

HEATED NOZZLE LOCATOR

INSTALLATION DATA

Please read carefully before installing components.

Note: Dimensions shown in Inches.

Heated Nozzle Locator

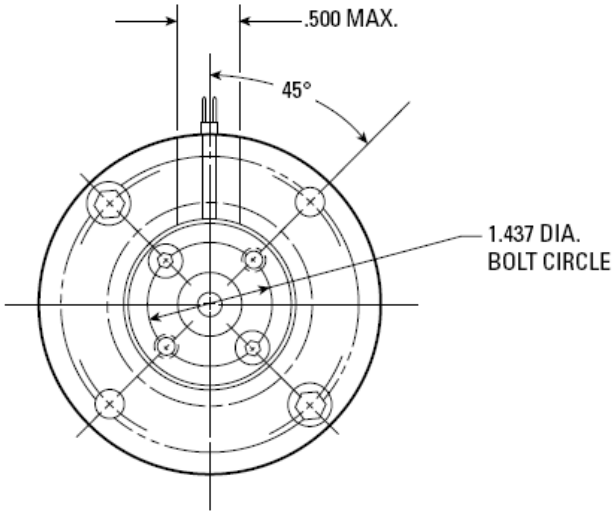

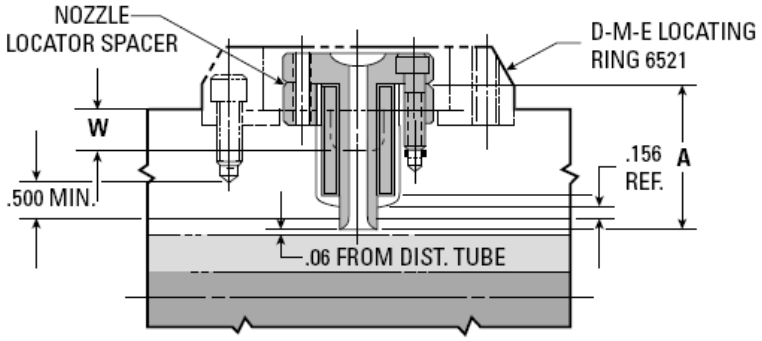

FIGURE 2

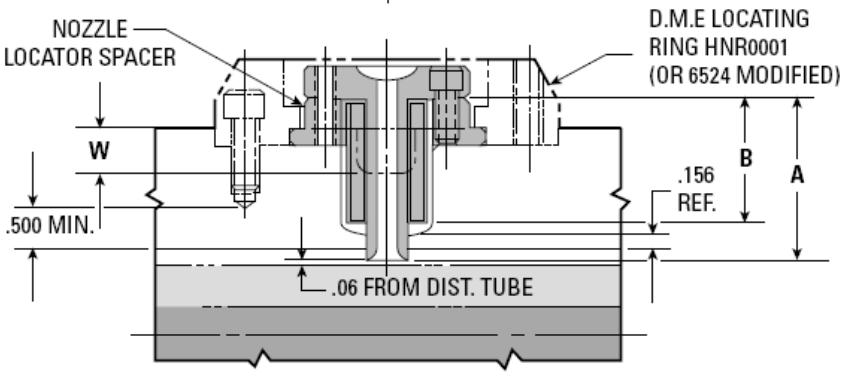

FIGURE 1

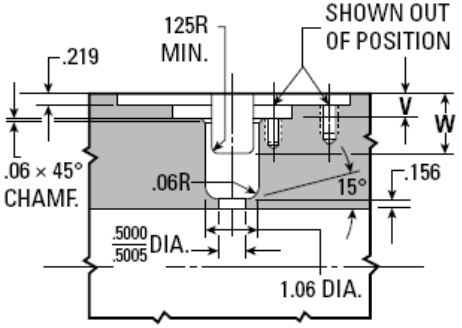

FIGURE 3

ALL APPLICATIONS

The locator's core tip should be positioned 0.060 from the top of the disributor tube, establishing the "A" dimension. In most cases, the dimension from the bottom of the core head to the locating ring counter bore will equal the adjusted height of the spacer. (The "B" dimension, for reference, is the heater length of 1.450 or 1.950, depending on core length bieng used.)

CLAMP STYLE SPACER APPLICATION (Figure 1)

The spacer is supplied with a flange and a 1.250 height. The flange may be used in conjuction with amodified D-M-E Model # 6524 locating ring to form a clamp-style spacer. To modify the locating ring, enlarge its 2.00 diameter counterbore to 2.281 (0.219 deep) and its 1.75 I.D: to 2.00 . The core is secured to the spacer with two 1/4-20 S.H.C.S.

BOLT THRU STYLE SPACER APPLICATION (Figure 2)

Another option is to remove the flange and adjust the spacer height to the desired dimension, then secure the Heated Nozzle Locator through the spacer with two 1/4-20 S.H.C.S. into the mold plate. Use caution to insure that the tapped holes are 0.500 minimum from the distributor channel.

Spacer thickness should never be less than 0.250. However, if a condition results where the spacer would be less than 0.250, counterbore a 2.00 diameter into the pltae to a "V" depth that will accept the 0.250 spacer (see Figure 3).

ALL APPLICATIONS

In order to maintain plate strength, the depth of the lead wire channel, dimension"W" , must be no deeper than required to contain the heater leads. The distance from the bottom of the core head to the bottom of the heater leads is 0.800 .Channel depth can be determined accordingly, based on the distance between the core head and top of the mold.

If a condition occurs where the Heted Nozzle Locator would extend above the standard locating ring, a special locating ring with extended flange for protecting the Heated Nozzle should be constructed.

D-M-E SHALL NOT BE LIABLE FOR MISUSE OR FAILURE TO FOLLOW THE ENCLOSED INSTRUCTIONS AND SPECIFICATIONS. D-M-E HERBY TO DISCLAIMS ALL IMPLIED WARRANTIES, INCLUDING MERCHANTABILITY AND FITNESS FOR A PARTICULAR PURPOSE. IN NO EVENT SHALL D-M-E BE RESPONSIBLE FOR LOSS OF USE, REVENUE OR PROFIT, OR FOR INCIDENTAL OR CONSEQUENTIAL DAMAGED.

WIRING INFORMATION

Probe Heaters are supplied with 34"long leads.
Heaters are 240 VAC.
2 power leads are Multi Color.
1 ground lead is GREEN.
Thermocouple is "J" Type.
Thermocouple is supplied with 34"/ 24 Gage leads.
1 T/C lead is WHITE and negative (-) constantan (non-magnetic).
1 T/C lead is BLACK and positive (+) iron (magnetic).

DME COMPANY
42827 Irwin Drive
Harrison Twp.,MI 48045 USA
US 800-626-6653
CANADA 800-387-6600
www.dme.net