4282 Irwin Drive
Harrison Twp., MI 48045 USA
800-626-6653

Integral Heater Thermocouple

INSTALLATION DATA

PLEASE READ BEFORE INSTALLING THERMOCOUPLE

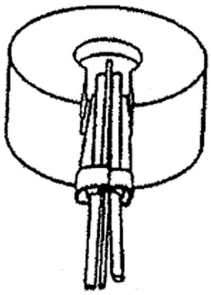

① Black leads are power and should not be disturbed.

② Carefully open lead retainer clip and remove old tape.

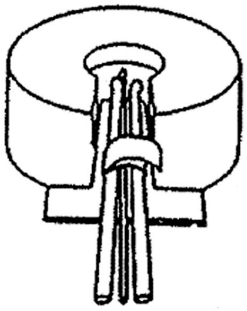

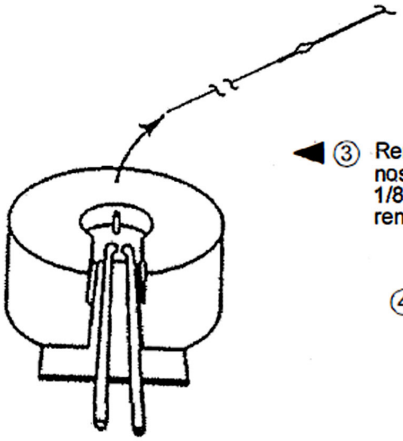

③ Remove thermocouple with long nose pliers, grasping the thermocouple 1/8" from the thermocouple well and remove slowly and carefully.

④ Clean themocouple well with 0.020 diameter music wire.

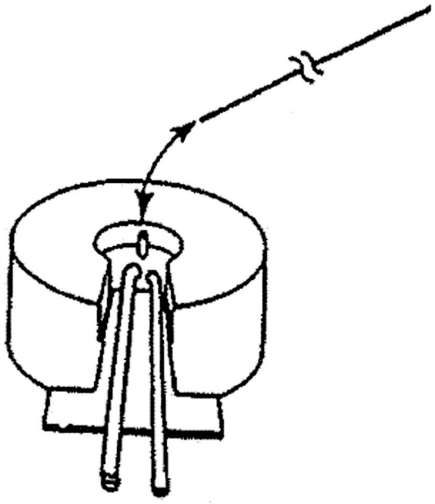

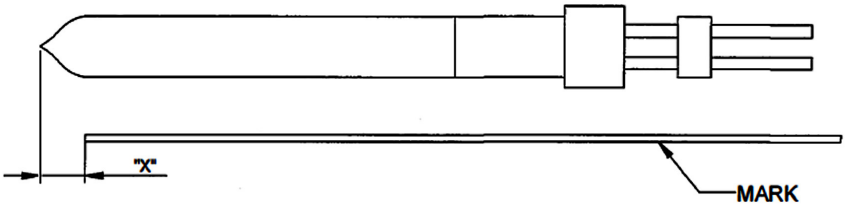

⑤ Hold new thermocouple parallel to length of probe. Move thermocouple so there is a "X" inch gap between its tip and the tip of the probe. Mark the thermocouple with a felt tip pen where it would be fully inserted into the probe.

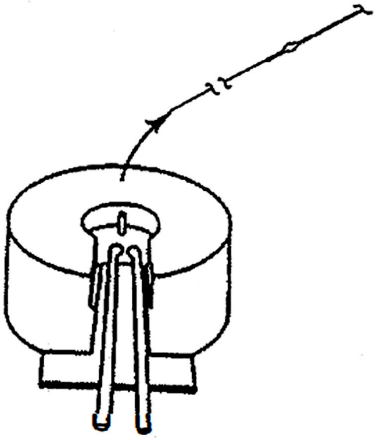

⑥ Hold new thermocouple with long nose pliers, approximately 1/4" from the probe, while inserting it in to the well.

4282 Irwin Drive
Harrison Twp., MI 48045 USA
800-626-6653

Integral Heater Thermocouple

INSTALLATION DATA

PLEASE READ BEFORE INSTALLING THERMOCOUPLE

⑦ Using high temperature tape, wrap all wires together, then carefully bend retainer clip around taped wires. Be careful not to damage the wire insulation.

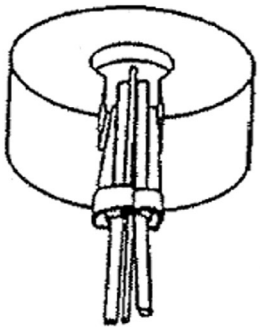

Inverted Probes	
Catalog #	"X"
FIP001-FIP0003	0.500

Distributor Probes	
Catalog #	"X"
FDP0001-FDP0012	.210
FDP0013	.500
FDP0014	1.000
FDP0015	1.500
FDP0016	2.000
FDP0017	2.500
FDP0018	3.000
FDP0019	3.500
FDP0020	4.000

Gating Probes	
Catalog #	"X"
AFIP4-322-(90)	0.375
AFIP4-372-(90)	
AFIP4-422-(90)	
AFIP4-472-(90)	
AFIP5-372-(90)	
AFIP5-422-(90)	
AFIP5-472-(90)	
AFIP5-522-(90)	
AFIP5-572-(90)	
AFIP5-622-(90)	

MPORTANT SAFETY INFORMATION —DANGER—

A hot runner system includes electrical elements and may contain molton plastic at elevated temperatures and pressure.

1. To avoid injury, exercise caution by reading these instructions before servicing or operating the system.
2. The instructions MUST be passed on to the end-user where they must be read before using this product. Failure to do so can result in serious injury or death.

STORED ENERGY & HIGH TEMPERATURE HAZARDS

Failure to comply can result in serious injury or death.

This product maintains molton plastic at high-pressure. Use caution when operating and servicing the system.

Physical contact with molton plastic may result in severe burns. Proper protective equipment, including eye protection, must be worn.

This product has heated surfaces. Use caution when operating and servicing the system to avoid severe burns. Proper protective equipment should be worn.

ELECTRICAL HAZARDS—WARNING—

Failure to comply will result in serious injury or death.

Improper voltage or grounding can result in electrical shock. Use only with proper voltage and proper earth grounding.

To avoid electrical shock, do not operate product when wet.

Do not operate this equipment with covers or panels removed.

To avoid electrical shock, turn off the main power disconnect and lockout/tag-out before servicing this device. Do not connect temperature sensors to electrical power. It will damage the product and could cause fire, severe injuries or death.

If green ground wire present, wire must be connected to the ground. Do not rebend rigid leads. Rebending leads might result in damage to the circuit. Product might absorb moisture when cool. Use low voltage or power to drive out residual moisture before applying full power. Failure to do so may cause damage to this product.