DME 42827 Irwin Drive, Harrison Twp., MI 48045 800-626-6653

JIFFY-TITE® COOLANT BRIDGE

☆ **The Coolant Bridge provides a more compact, neater, and safer way to connect ports on a mold.**

☆ **Industry exclusive indicator grooves facilitate cutting tubes to the desired length.**

INSTALLATION:

1.) Cut finished tube to the desired length using the indicator grooves on top of the socket adapters. First install the sockets in place, checking to make sure the holes in the socket adapters are facing each other. Then use center of groove as cut line. **Leakage could result if tube length tolerance is not observed.**

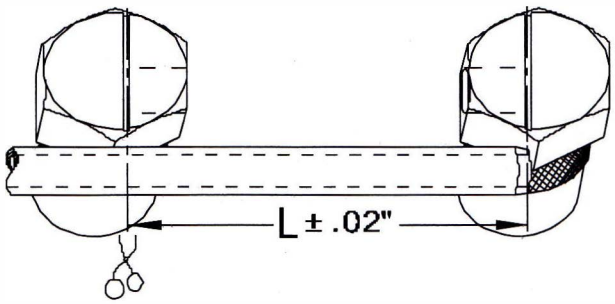

Do not exceed 200 psi and 400° F

L = Length of cut tube from center of groove to center of groove

-over-

2.) **It is important to properly chamfer the ends of the tube as shown to prevent damage to o-ring seal (Viton) as tube is inserted.** Chamfer the ends of the tubes as follows:

- Chamfer the 5/16" O.D. tube (200 series) .07" x 20°.
- Chamfer the 7/16" O.D. tube (300 series) .08" x 20°.

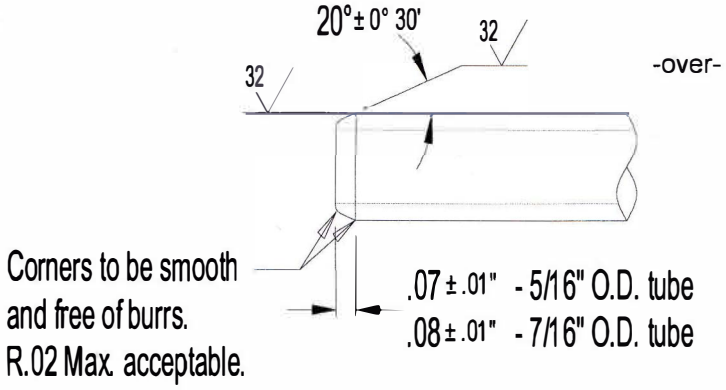

-over-

3.) Insert tube into socket adapters to form the bridge. Connect bridge to plugs already in the mold counter-bores. Plugs should be installed at approximately equal heights, see reference chart.

Jiffy Seal® thread sealant permits initial repositioning of the connector plugs without the need for additional sealant.

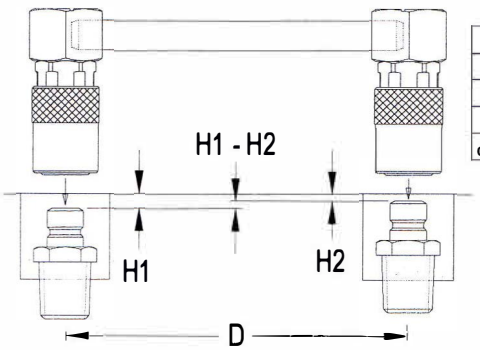

D:	H1 - H2:
2" to 4"	± .010"
over 4" to 8"	± .020"
over 8" to 12"	± .030"
over 12" to 18"	± .040"

H1 - H2 is the allowable difference in installed height from the edge of the mold to the neighboring plugs.

Jiffy- Tite and Jiffy Seal are registered trademarks of Jiffy-Tite Company, Viton is registered trademark of Dupont **P/N 970731 Rev 5.26.98**