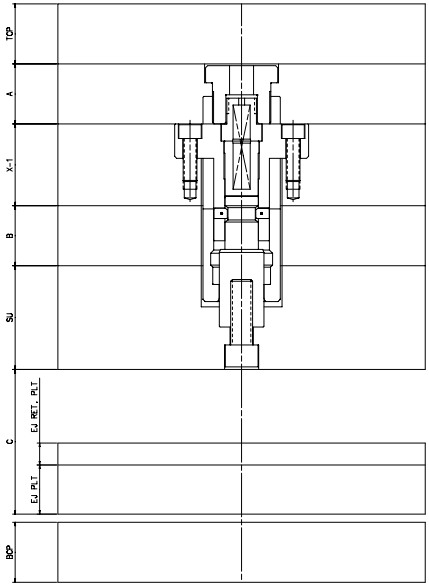

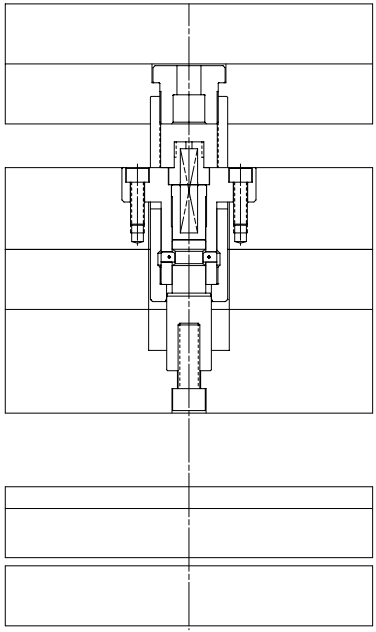

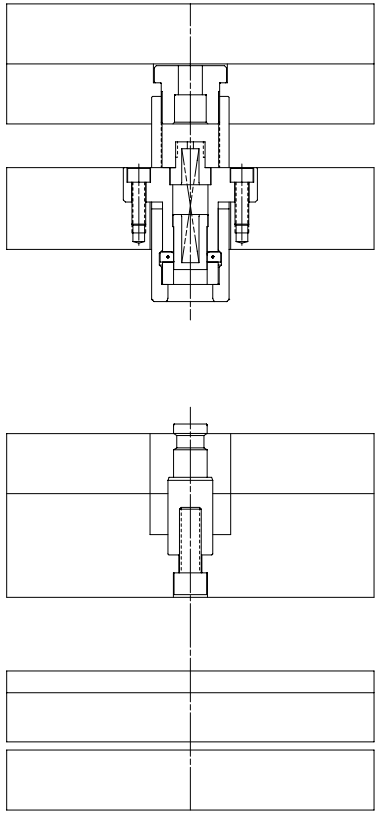

TO FLOAT "X-1" PLATE AWAY
FROM "A" PLATE WHILE LOCKING
"X-1" AND "B" PLATES. CENTER
ROD TIED INTO SUPPORT PLATE.

DME 42827 Irwin Drive, Harrison Twp., MI 48045 800-626-6653