42827 Irwin Drive
Harrison Twp., MI 48045 USA
800-626-6653

Parting Line Interlocks

Machined from the Mold Parting Line
MACHINING & INSTALLATION INSTRUCTIONS

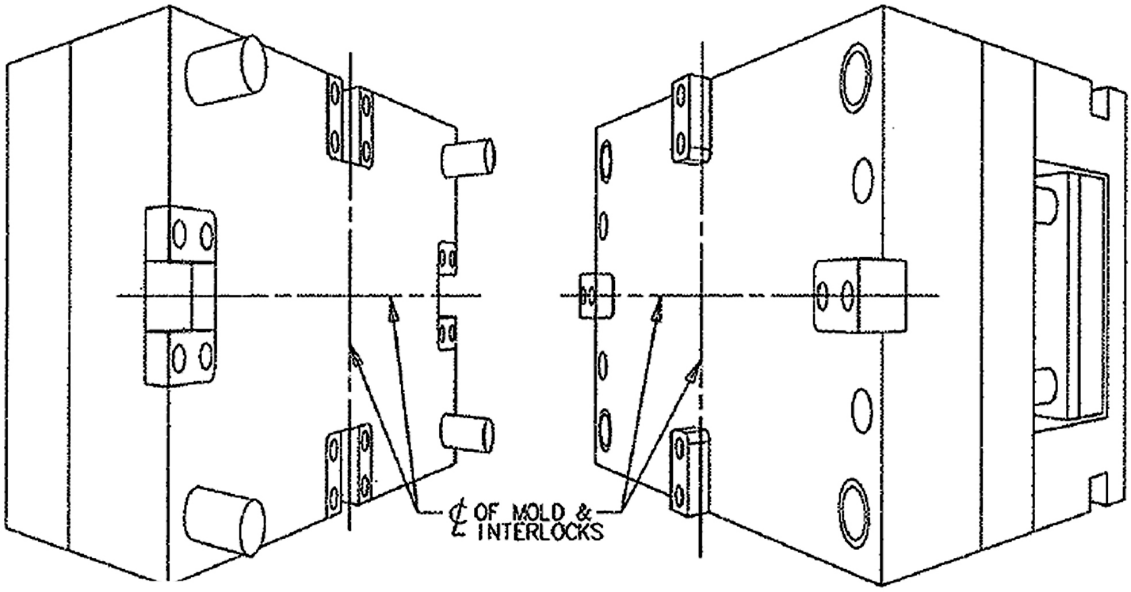

The DME parting line interlocks are designed for use where the two halves of the mold must be closely aligned with each other. They are designed to be installed with all machining done from the parting line of the mold. The machining of the pockets for the parting line interlocks is extremely important since it establishes the accuracy of the alignment, as well as the fit between the interlock components. Refer to the notes below, as well as the charted information for additional installation instructions.

MACHINING & INSTALLATION INSTRUCTIONS

1. Four sets of DME Parting Line Interlocks must be used in each mold application. When in operation, the engaged interlocks contact the edges of the machined pockets to maintain the parting line alignment. The socket head cap screws are only used to retain the interlocks to the mold base. It 's extremely important that the pockets be very closely machined and very accurately aligned.

2. The center of each pocket for the Parting Line Mounted Interlock must be located on the centerline of the mold base on each side and each end of the mold. This centerline location is critical to avoid misalignment problems which could result from uneven thermal expansion of the individual mold plates. Again, it is very important to machine the pockets for each set of interlocks with extreme accuracy in both alignment and fit.

3. Individually and uniquely mark each of the components of the mating Parting Line Interlocks, as well as their positions in the mold. This will insure that the interlocks will remain as sets once they hove been installed.

4. The Parting Line Interlock Right and Left Hand Gibs must be mounted to the plate which is exposed to the highest operating temperature. Normally, this will be on the stationary or "A" half of the mold. This procedure is critical to insure that the center mold interlock does not grow larger than the Right and Left Hand Gib Interlock area if uneven mold temperatures are present.

5. To maintain accurate alignment between the parting lines, it is recomnended that first the pockets for the Center Male Parting Line Interlock be finish machined. Then the locations for the tops for the socket head cap screws can be transferred from lhe component or dimensionally located in the pocket areas on the mold. These mounting holes for retaining the Center Male Interlocks should then be drilled and tapped as required. Then install the Center Male Interlocks using the included socket head cap screws. The finished pockets can now be machined for the Right and Left Hand Gib Interlocks using the dimensional information in the chart while maintaining a very close center alignment with the Center Male interlocks. With the mold assembled, gage blocks can be used to establish a finish size for each individual gib and each gib can be ground individually to maintain a recommended minimum of .0002 clearance per side between each gib and the Center Male Interlock. The gibs must be ground only on the outside (radius side) surface. Do not alter the Center Male Interlocks. It may sometimes be necessary to use clearances greater than .0002; mold maker to adjust to suit application.

42827 Irwin Drive
Harrison Twp., MI 48045 USA
800-626-6653

Parting Line Interlocks

Machined from the Mold Parting Line
MACHINING & INSTALLATION INSTRUCTIONS

6. After the pockets for the Right & Left Hand Gib Interlocks hove been accurately machined, aligned, and the gibs ground to establish the proper fit, the locations of the tops for the socket head cop screws can now be transferred from the components or dimensionally located in the pocket areas on the mold. These mounting holes for retaining the Gib Interlocks should then be drilled. and tapped, as required. Then install the Right and Left Hand Gibs with the included socket head cap screws. Each set of interlocks should be checked to assure that the desired fit (clearances) and alignment hove been accurately achieved.

7. Torque the Socket Head Cop Screws to:
   76 inlbs for #10-32 Socket Head Cap screws (or 6.3- ftlbs)
   158 inlbs for 1/4-20 Socket Head Cap screws (or 13.2 ftlbs)
   580 inlbs for 3/8-16 Socket Head Cap screws (or 48.3 ftlbs)
   1,420 inlbs for 1/2-13 Socket Head Cap screws (or 118.3 ftlbs)

8. After installation of al l four sets of interlocks, open and close the mold while the mold is on the bench to check and insure proper alignment has been achieved.

9, Always maintain lubrication on the interlocks to extend the life of each component. Lubrication will enhance the function of the surface treatments to reduce any wear, as well as minimize any possibility of galling.

10. Refer to the nextpage for basic dimensional information to use in mounting the Parting Line Interlocks on a mold. Moldmaker may adjust fit to suit specific application. Installation of other mold components, waterlines, taps for eyebolts, etc. must not interfere with the machined pockets or drilled and tapped holes for mounting of the Parting Line Interlocks.

	Catalog #	Com-ponent Name	"A" dim	"B" Dim	"C" Dim	"D" Dim	"E" Pocket	APX. STK. for Fitting Gib	"F" Dim	"G" Dim	Rad.	Thread	Tap Depth	SHCS Length
One Set (4 sets required per mold	PLL-1001	Center	.4998	1.000	.85	.375	.5000	Do Not Alter	.250	.500	.19	#10-32	.50	1.00
	PLL-2001	Right	.5000	1.000	.500	.505	1.4900	.003 to .005	.250	.500	.19	#10-32	.50	.62
	PLL-3001	Left	.5000	1.000	.500	.505	1.4900	.003 to .005						
One Set (4 sets required per mold	PLL-1002	Center	.9998	1.500	1.35	.625	1.000	Do Not Alter	.312	.875	.25	1/4-20	.62	1.50
	PLL-2002	Right	.7500	1.500	.750	.755	2.4900	.003 to .005	.312	.875	.25	1/4-20	.62	.87
	PLL-3002	Left	.7500	1.500	.750	.755	2.4900	.003 to .005						
One Set (4 sets required per mold	PLL-1003	Center	1.4998	2.000	1.72	.750	1.5000	Do Not Alter	.438	1.125	.38	3/8-16	.88	2.00
	PLL-2003	Right	1.000	2.000	1.000	1.005	3.4900	.003 to .005	.438	1.125	.38	3/8-16	.88	1.25
	PLL-3003	Left	1.000	2.000	1.000	1.005	3.4900	.003 to .005						
One Set (4 sets required per mold	PLL-1004	Center	1.998	2.500	2.10	.875	2.000	Do Not Alter	.562	1.375	.50	1/2-13	1.00	2.25
	PLL-2004	Right	1.2500	2.500	1.250	1.255	4.4900	.003 to .005	.562	1.375	.50	1/2-13	1.00	1.50
	PLL-3004	Left	1.2500	2.500	1.250	1.255	4.4900	.003 to .005						

Refer to Note #5 regarding the size of the pocket for the right and left hand gib interlocks. The pocket size specified in the chart will provide .003 to ,005 approx. stock for grinding each individual gib only on the outside (radius side) surface for final fitting.

42827 Irwin Drive
Harrison Twp., MI 48045 USA
800-626-6653

Parting Line Interlocks

Machined from the Mold Parting Line
MACHINING & INSTALLATION INSTRUCTIONS

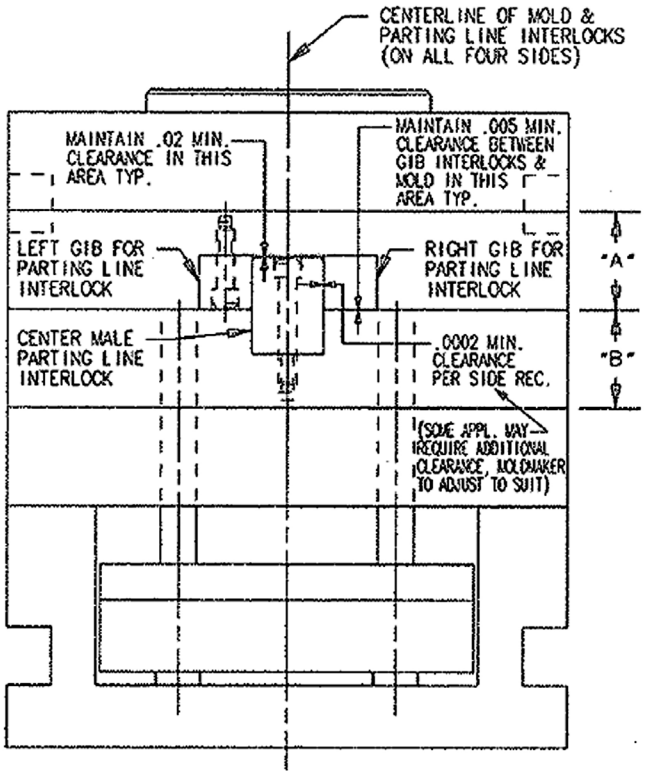

Typical Mold Application for Parting Line Interlocks

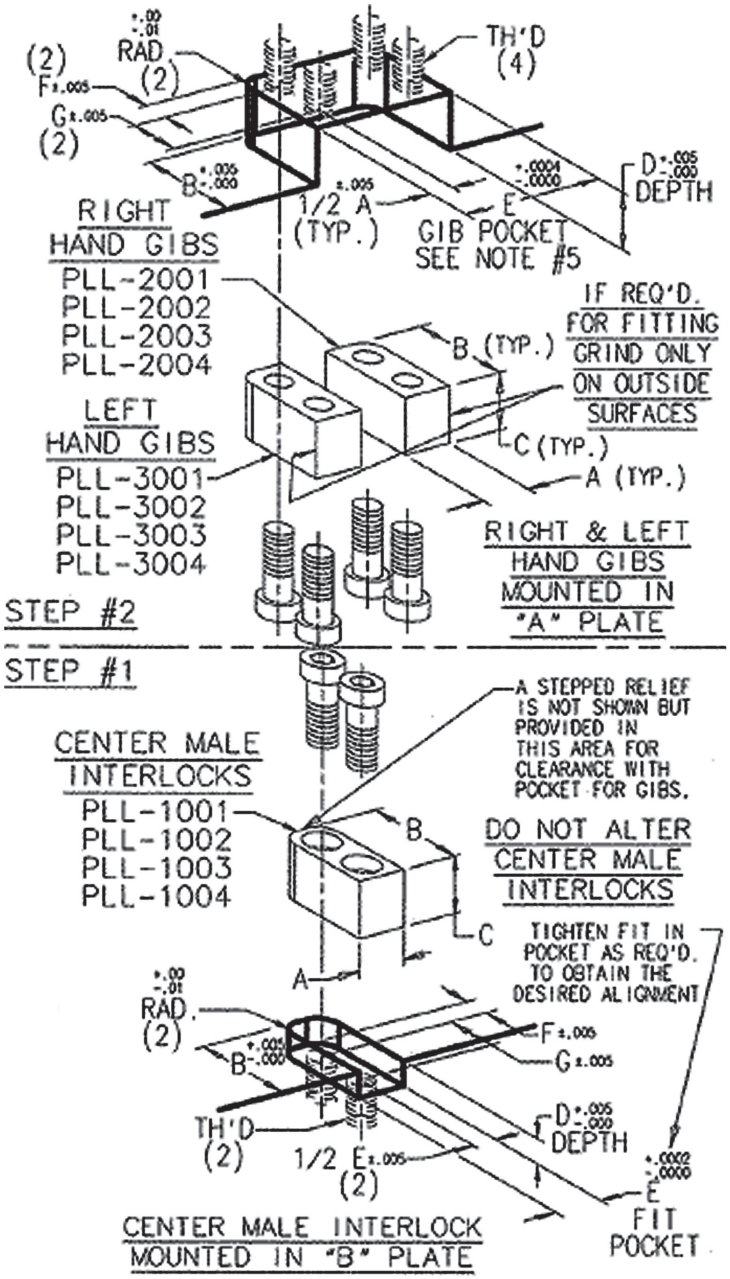

Please refer to the Mold Components Catalog for all specific dimensional information on the Parting Line Interlocks

Additional Notes:

A. The machining of the pockets for the parting line interlocks is extremely important since it establishes the accuracy of the alignment, as well as the fit between interlock components.

B. Pocket dimensions shown in the chart will provide approx. .003 to .005 stock for grinding on the outside (radius side) surface of the right and left hand gibs for fitting to maintain a minimum of .0002 per side clearance with center male interlock. It is also possible to accurately measure each individual interlock component and maintain a minimum of .0002 per side clearance between the center male interlock and each gib to establish a finished pocket size for the gibs.

C. Some applications may require additional clearance, moldmaker to adjust fit to suit specific application.

D. Please refer to the Machining & Installation Instructions on the 1st page.

E. (2) socket head cap screws (SHCS) of the thread size and length indicated on the chart are included with each parting line interlock component.