DME 42827 Irwin Drive, Harrison Twp., MI 48045 800-626-6653

DME Integrally Heated Sprue Bushings - .750 SERIES

Specification No. ME-M741-PS-999(B)
Part No. INT-HSB-75-99

IMPORTANT SAFETY INFORMATION

1. A hot-runner system includes electrical elements and may contain molten plastic at elevated temperature and pressure. To avoid injury, exercise caution by reading these instructions before servicing or operating the system.
2. These instructions must be passed on to the end user where they should be read before using this product. Failure to do so can result in serious injury or death.

DANGER **Failure to comply will result in serious injury or death:**
ELECTRICAL HAZARDS

1. Improper voltages or grounding can result in electrical shock. Use only with proper voltage and a proper earth ground.
2. To avoid electrical shock, do not operate product when wet.
3. Do not operate this equipment with covers or panels removed.
4. To avoid electrical shock, turn off main power disconnect and lockout / tag out before servicing this device. Do not connect temperature sensors to electrical power. It will damage the product and it can cause fire, severe injuries or even death.
5. Utilizes the direct contact of the bushing, mold plates, and machine platens to establish a path for grounding. There must be a ground ⏚ present between the Mold "Hot Half" and the temperature control system or damage may occur to the bushing, thermocouple, and/or temperature control system.
6. Do not rebend rigid leads. Rebending leads might result in damage to circuit.
7. Product might absorb moisture when cool. Use low Voltage or power to drive out residual moisture before applying full power. Failure to do so may cause damage to this product.

WARNING **Failure to comply can result in serious injury or death:**
STORED ENERGY AND HIGH TEMPERATURE HAZARDS

1. This product maintains molten plastic at high pressure. Use caution when operating and servicing the system.
2. Physical contact with molten plastic may result in severe burns. Proper protective equipment, including eye protection, must be worn. This product has heated surfaces. Use caution when operating and servicing the system to avoid severe burns. Proper protective equipment should be worn.

Operating & Servicing Instructions: The DME Integrally Heated Sprue Bushing bodies are identical in design, but differ in length, diameter and head style. All Sprue Bushings feature: an integrated heater; Type "J" thermocouple; 60" wrapped - 600 Volt leads; right angle lead exit, and 6" stainless steel, square-lock armor cable. **Power requirements:** 240 Volts AC - 15 amp fuse.

Start-up/Operating Procedures: If the temperature controller does not utilize "soft-start" technology, set the controller to 200ºF (93.3ºC) in automatic or 10% in manual. Allow bushing to "soak" for 15 minutes before increasing to processing temperature. This step will allow the unit to dissipate any moisture and prolong heater life.

Gating Options / Bushing Dimensions

Sprue Gate

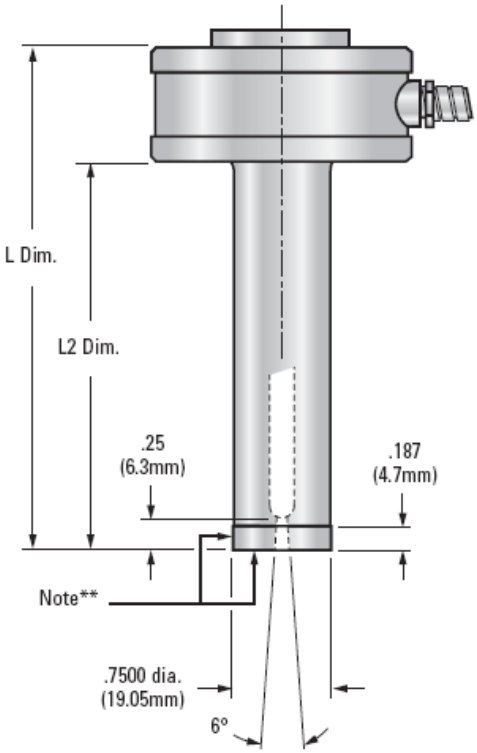

Extra Stock Sprue Gate

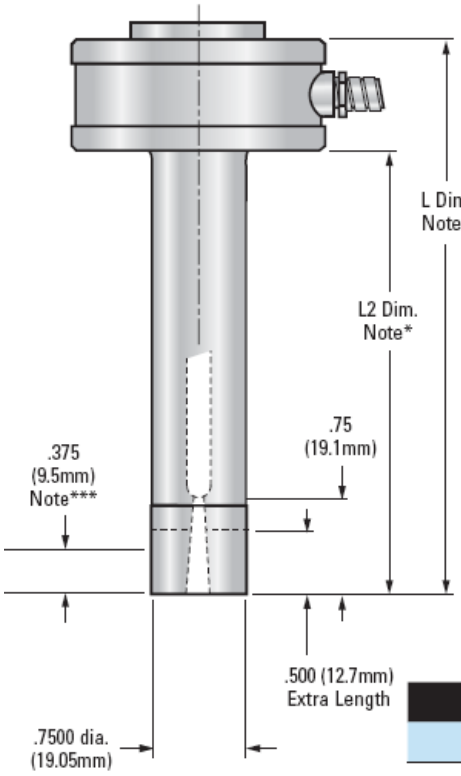

Head Options

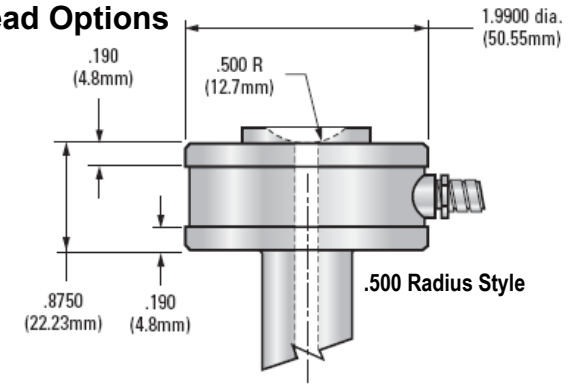

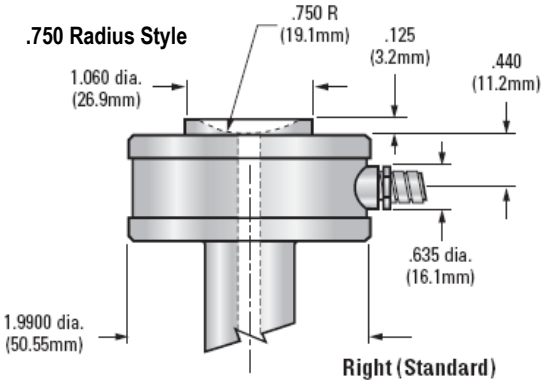

LEAD EXIT	RIGHT
Armor	*

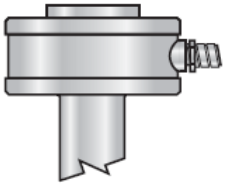

*Standard Lead exit —
60" (1.52m) wrapped — 600 Volt leads;
right angle lead exit; and 6" (15.2cm)
stainless steel, square-lock armor cable

* Dimensions include extra length.
** This surface cannot be machined, modified or altered.
*** Maximum machining stock, only this area can be machined.

DME Integrally Heated Sprue Bushings - .750 SERIES

Specification No. ME-M741-PS-999(B)
Part No. INT-HSB-75-99

GATE STYLE	L DIM.		L2 DIM.		.500 RADIUS HEAD	.750 RADIUS HEAD	WATTS	THERMOCOUPLE
Sprue	2.375″	(60.3)	1.500″	(38.1)	SB031000	SB031001	315	MT020020
	2.875″	(73.0)	2.000″	(50.8)	SB031008	SB031009	370	MT020020
	3.375″	(85.7)	2.500″	(63.5)	SB031016	SB031017	425	MT020020
	3.875″	(98.4)	3.000″	(76.2)	SB031024	SB031025	480	MT020020
	4.375″	(111.1)	3.500″	(88.9)	SB031032	SB031033	535	MT020021

GATE STYLE	L DIM.		L2 DIM.		.500 RADIUS HEAD	.750 RADIUS HEAD	WATTS	THERMOCOUPLE
Extra Stock Sprue	2.875″	(73.0)	2.000″	(50.8)	SB031004	SB031005	315	MT020020
	3.375″	(85.7)	2.500″	(63.5)	SB031012	SB031013	370	MT020020
	3.875″	(98.4)	3.000″	(76.2)	SB031020	SB031021	425	MT020020
	4.375″	(111.1)	3.500″	(88.9)	SB031028	SB031029	480	MT020020
	4.875″	(123.8)	4.000″	(101.6)	SB031036	SB031037	535	MT020021

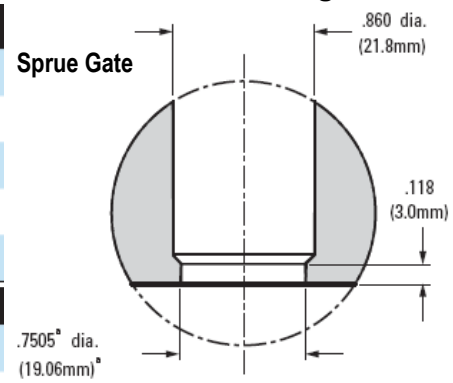

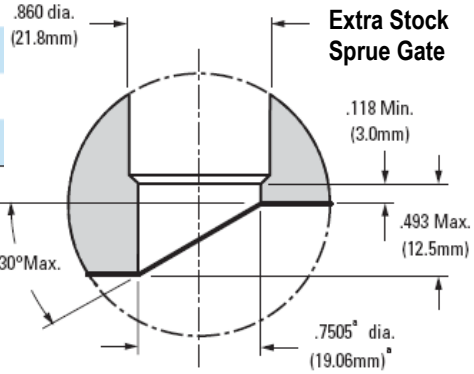

L.R.D.	PART NUMBER
3.990″ (101.3mm)	ML010012
4.990″ (126.7mm)	ML010025

Locating Ring Dimensions/Chart

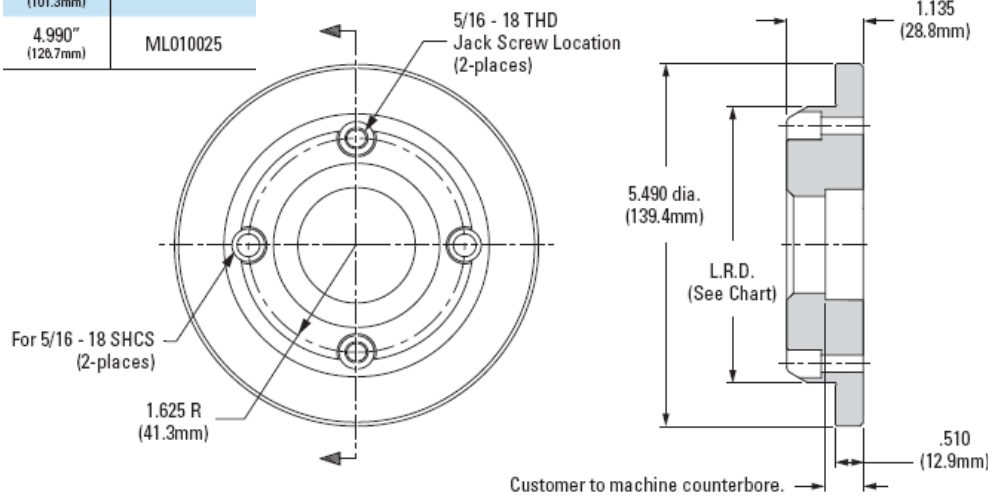

Machining Options for Keying

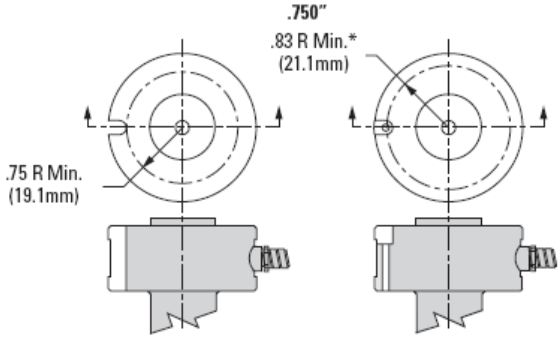

.750 " Series Bore Dimensions

Insulating Washer Ordering

	TOP	BOTTOM
Part	# MAX10015	MAX10027
O.D.	1.99 (50.5mm)	1.99 (50.5mm)
I.D.	1.07 (27.2mm)	.810 (20.6mm)
Thickness	.125 (3.2mm)	.125 (3.2mm)

Note: Insulating Washers are not required, but are recommended for high temperature applications.

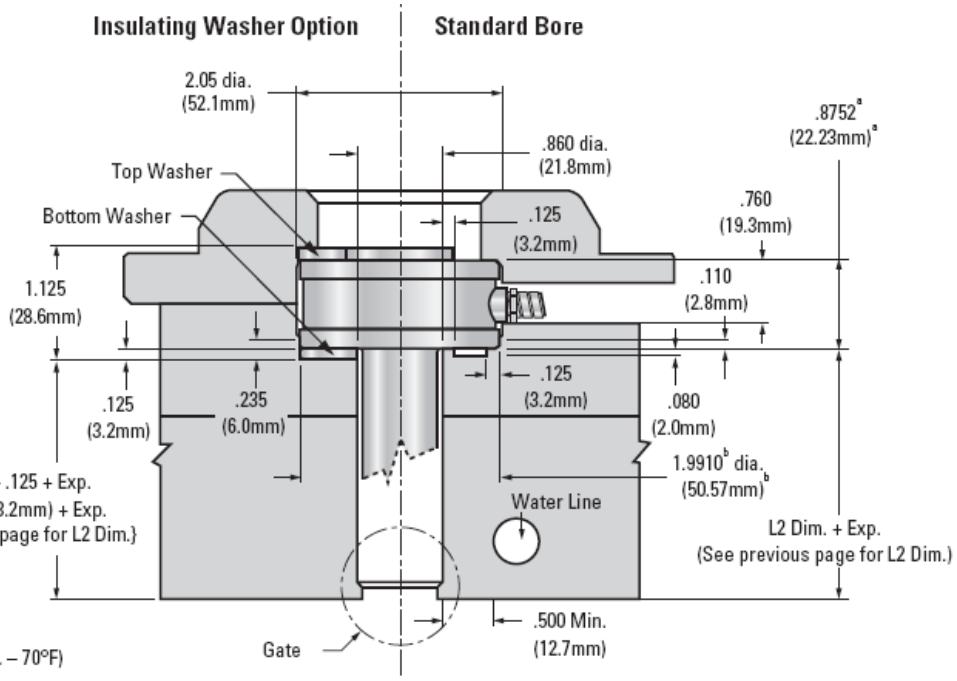

Bore & Gate Tolerances

Tol. "a" Chart	
in:	+ 0.0005 / – 0
mm:	+ 0.01 / – 0

Tol. "b" Chart	
in:	+ 0.0010 / – 0
mm:	+ 0.02 / – 0

Thermal Expansion (Exp.) Formulas

Exp. in = L2 in. × 6.88×10^{-6} × (Processing Temp. – 70°F)

Exp. mm = L2 mm × 13×10^{-6} × (Processing Temp. – 21°C)

Ref: 10^{-6} = 0.000001

NOTICE:

DME shall not be liable for misuse or failure to follow the enclosed instructions and specifications. DME hereby disclaims all implied warranties, including merchantability and fitness for a particular purpose. In no event shall DME be responsible for loss of use, revenue or profit, or for incidental or consequential damages.