DME TOGGLE-LOK

POSITIVE EARLY EJECTOR PLATE RETURN

INSTALLATION INSTRUCTIONS FOR STANDARD TOP MOUNT CATALOG NO. TLTM-100

WARNING **Failure to comply with these warnings may lead to personal injury. COMPONENT FALL DUE TO GRAVITY. PINCH OR CRUSH HAZARD.**

The DME Toggle-Lok assembly is comprised of lever arms which when partially unfastened from a mold and released, may swing down due to gravity. Care needs to be taken when installing, adjusting or repairing this assembly, either on a bench or in an injection press. When servicing while the mold while it is installed in an injection molding press, always ensure the press guard doors are interlocked with the operation of the machine platens. Do not attempt to service this product while the mold is in the press if the press guard doors are not interlocked with the operation of the machine platens. It is safer and more effective to service the mold when it is on a work bench. Wear proper protective equipment including gloves and eye protection. These instructions must be passed on to the end user who should read them carefully before using this product. Failure to do so may result in serious injury.

Installation instructions:

The Top Mount is used when the ejector plate extends beyond the end of the mold, since it is designed to be mounted on top of the ejector plate. Refer to the table provided in the DME Mold Components Catalog for the specific Top Mount required for your Toggle-Lok package.

NOTE: Please refer to the DME Mold Components Catalog page titled, “Basic Design Guidelines for Standard Mold Bases,” for additional information.

1. Entire setup is made with mold in the fully closed position.
2. Machine clearance for the lever on either end of the mold where the housing is open for the ejector plate and place the lever in its proper position:
   a) Central to mold if style X
   b) As specified in table for style Y
   c) As far out from centerline of mold as possible, keeping mounts on ejector plate for style Z.
3. Check to be sure levers, mounts, arms and joints including their mounting screws and dowels will not interfere with other mold components through their entire movement.
4. The lead-in end of all levers must be the same height and sides must be square to the top of the mold. Locate and drill, or transfer if lever has mounting holes for two 3/8-16

UNC S.H.C.S. Tighten S.H.C.S. and check for proper location and squareness. Maintaining correct position, locate, or (if lever has mounting holes) transfer from lever for dowels. Then drill and ream for 3/8 -inch diameter dowels. Place lever spacer under lever and assembly with screws and dowels.

5. The template furnished must be altered in order to use for the Top Mount. There are two basic options:

   a) Placing the Top Mount on top of the ejector plate with the cover plate in position under the mount. This will require machining the template shorter by an amount equal to the thickness of the ejector plate from the end stamped “ejector plate.” This will also move the position of the stripper bolt toward the parting line of the mold slightly from the position shown in the chart for the Side Mount. This will require checking to see that the stripper bolt does not come too close to the split line of the mold plates. (A thicker “B” plate may sometime be required or a spacer plate under the Top Mount to work around interference with split lines. See reference drawing marked “A” attached to these instructions for more detail.)

   b) Maintaining the same position as specified in the chart for the Side Mount of the 5/8 inch diameter hole in the mount for the joint between both the Side Mount and the Top Mount. This is accomplished by machining a pocket in the top of the ejector plate deep enough to maintain this same location with the cover plate in position under the Top Mount. This will require cutting the template furnished shorter by an amount equal to the sum of the thickness of the ejector plate and the depth of the pocket in the ejector plate required to maintain the proper position. This amount is machined from the end of the template marked “Ejector Plate.” This option, however, is not possible with the Small Side Mount. See reference drawing marked “B” attached to these instructions for more detail.)

   NOTE: To assure proper template is being used for setup, confirm that catalog number on template corresponds with that specified in table for specific Toggle-Lok package used.

6. Transfer hole for stripper bolt by placing template (furnished and altered as specified in step #5) against the lever and against the top of the ejector plate. Drill and tap for 1/2 -13 UNC shoulder screw at top.

7. Repeat above procedure on opposite side of lever by reversing transfer template. Keep side of template marked “Lever” against lever and side of template (furnished and altered as specified in step #5) marked “Ejector Plate” against the top of ejector plate.

8. Install arm using shoulder screw facing opening of arm down.

9. Place joint in Top Mount.

10. Repeat steps 8 and 9 on opposite side of Lever.

11. Repeat steps 6, 7, 8, 9, 10 on opposite end of mold.
12. Place cover plates under Top Mounts and transfer clearance hole in cover plate for dowel.
13. Rest Top Mount on top of ejector plate (or in machined pocket in top of ejector plate depending on option decided on in step #5) with cover plate in place under Top Mount and move until arm is against lever. Then, transfer from Top Mount location for two (2) 1/4-20 UNC S.H.C.S.
14. Repeat at other three locations.
15. Then, drill and tap for 1/4-20 UNC S.H.C.S. and reassemble with cover plate in place under Top Mount.
16. Ensuring the correct location as in step #13, tighten 1/4-20 UNC screws and transfer location of 1/4 -inch diameter dowel from Top Mount.
17. Disassemble drill and ream for 1/4 -inch diameter dowel.
18. Assemble mold and engage linkage as in step #9.
19. Repeat steps 15 through 18 for all mounts.
20. Maintain 1/64 -inch clearance between mount and end of mold as specified in DME Catalog.
21. Dry cycle mold on bench to check for proper operation of early return.

    NOTE: For smoother operation, a thin coat of heavy grease should be applied to leavers and arms.

NOTE: DRAWINGS BELOW ARE FOR REFERENCE ONLY, AND ARE NOT TO SCALE. ALWAYS USE PROPER TEMPLATE INCLUDED WITH ASSEMBLY.

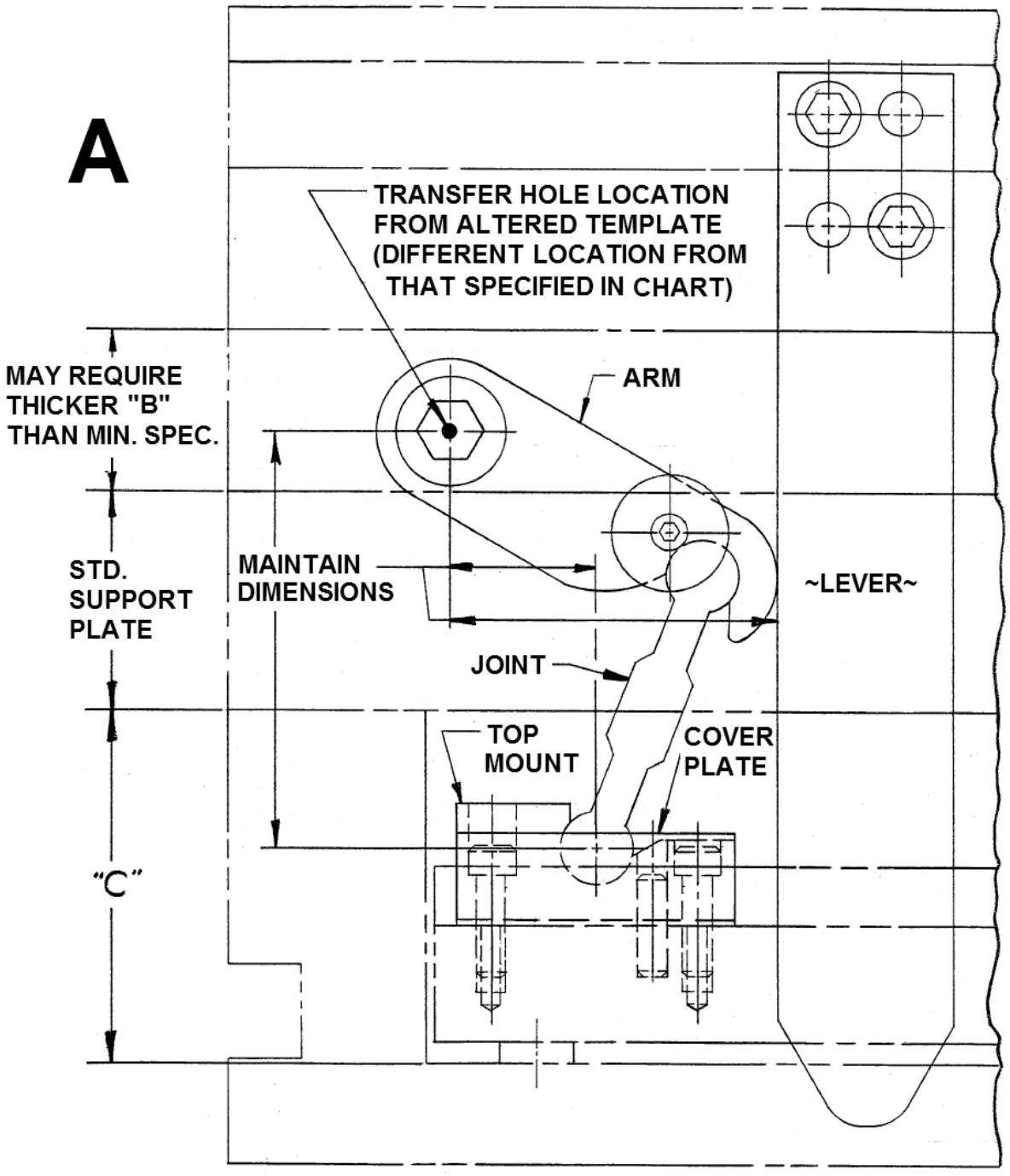
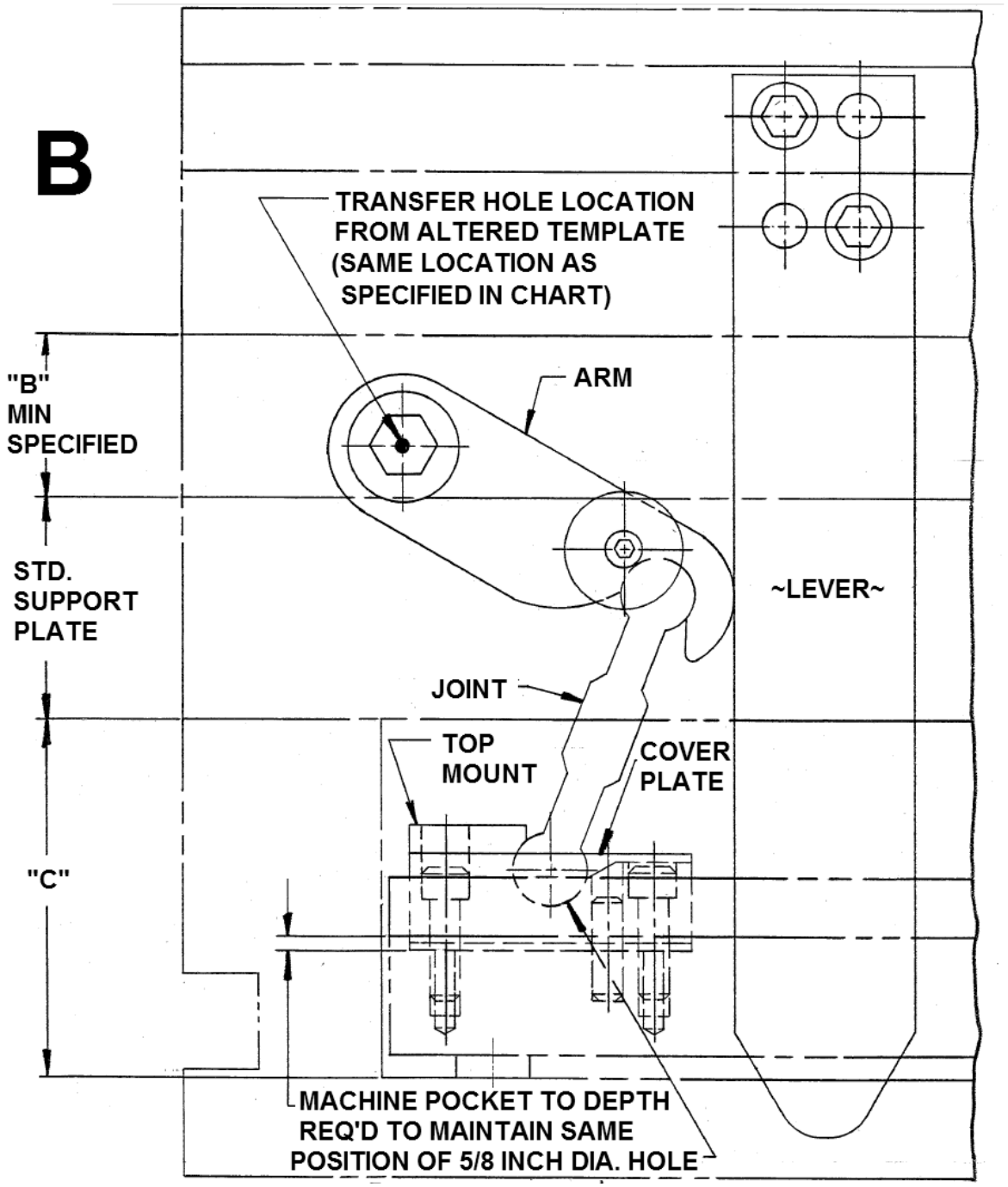
NOTE: DRAWINGS BELOW ARE FOR REFERENCE ONLY, AND ARE NOT TO SCALE. ALWAYS USE PROPER TEMPLATE INCLUDED WITH ASSEMBLY.