CODIPRO GRAD-UP

SWIVEL EYEBOLTS. RINGS & SHACKLES

360° of Versatility, CE Certified and Fatigue Tested. Combine with DME's other tested and certified products to meet all your lifting needs.

Codipro Gradup SEB Swivel Eyebolts

- The optimization of the raw materials enable a significant improvement in the WLL: up to 11% additional WLL (23% in safety factor 4)
- Anti-corrosion coating means that the unpainted parts of the Codipro lifting rings are resistant to salt mist spray for 600 hours

Features:

- Swivels under the load
- Equipped with an automatic position recovery system
- Tightens with Allen Wrench
- High WLL in all directions
- Optimizes orientation in the direction of the sling
- Standard in Metric and Inch
- Adaptor, centering feature and special thread options available as special order

Gradup

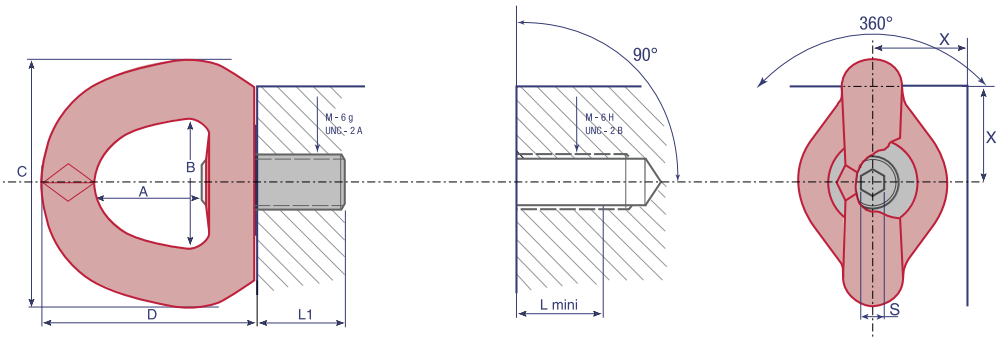

1in = 25.4mm

PART NUMBER	THREAD	SF 5:1 WLL (t)	SF 4:1 WLL (t)	STANDARD L_1 (mm)	TORQUE N.m (Nm)	X	S (mm)	A (mm)	B (mm)	C (mm)	D (mm)	WEIGHT (KG)
SEBM8UP	M8 (x1.25)	0.40	0.50	14	6	20	6	30	34	60	57	0.24
SEBM10UP	M10 (x1.5)	0.50	0.70	17	10	20	6	30	34	60	57	0.24
SEBM12UP	M12 (x1.75)	0.80	0.90	21	15	20	6	30	34	60	57	0.24
SEBM16UP	M16 (x2)	1.40	1.80	27	50	35	8	38	45	88	80	0.8
SEBM20UP	M20 (x2.5)	2.00	2.70	30	100	35	8	38	45	88	80	0.8
SEBM243T8UP	M24 (x3)	3.20	3.80	36	160	50	14	38	45	88	80	0.8
SEBM244T2UP	M24 (x3)	3.40	4.20	36	160	50	14	58	70	115	106	2.6
SEBM30UP	M30 (x3.5)	5.50	6.30	45	250	50	14	58	70	115	106	2.7
SEBM36UP	M36 (x4)	9.00	11.00	54	320	70	14	83	94	168	155	7.0
SEBM42UP	M42 (x4.5)	12.00	15.00	63	400	70	14	83	94	168	155	7.0
SEBM48UP	M48 (x5)	15.00	16.00	68	600	70	19	80	94	168	155	7.0
PART NUMBER	THREAD	SF 5:1 WLL (lbs)	SF 4:1 WLL (lbs)	STANDARD L_1 (mm)	TORQUE N.m (foot/lbs)	X	S (mm)	A (mm)	B (mm)	C (mm)	D (mm)	WEIGHT (KG)
SEB3/8UP	UNC 3/8-16	1200	1500	16	8 F.L	20	4	30	34	60	57	0.24
SEB1/2UP	UNC 1/2-13	1800	1950	21	12 F.L	20	4	30	34	60	57	0.24
SEB5/8UP	UNC 5/8-11	3200	4000	27	40 F.L	35	8	38	45	90	78	0.8
SEB3/4UP	UNC 3/4-10	4750	5900	30	80 F.L	35	8	38	45	90	78	0.8
SEB1UP	UNC 1-8	7500	9300	36	125 F.L	50	14	58	70	134	115	2.6
SEB11/4UP	UNC 1 1/4-7	12,200	13,800	45	200 F.L	70	14	58	70	134	115	2.8
SEB11/2UP	UNC 1 1/2-6	20,000	25,000	62	300 F.L	70	14	88	94	190	166	7.0

Codipro Gradup DSR Double Swivel Rings

Specially Designed for Lifting Under load

Features:

Swivels under the load

Designed for loads in rotation with Axial Shackle

Two ways of tightening; open-ended spanner or allen key

- Axial shackle position
- Standard in Metric and Inch
- Stainless steel, adaptor, centering feature and special thread options available as special order

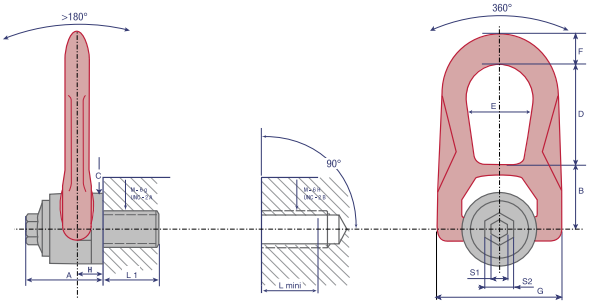

1in = 25.4mm

PART NUMBER	THREAD (DIA)	SF 5:1 WLL (t)	SF 4:1 WLL (t)	STANDARD L1 (mm)	TORQUE N.m	S1 (mm)	S2 (mm)	A (mm)	B (mm)	C (mm)	D (mm)	E (mm)	F (mm)	G (mm)	H (mm)	WEIGHT (KG)
DSRM5UP	M5 (x0.8)	0.07	0.10	15	3	8	16	32	30	30	38	27	14	53	9.5	0.3
DSRM6UP	M6 (x1)	0.15	0.20	15	4	8	16	33	30	30	38	27	14	53	9.5	0.3
DSRM8UP	M8 (x1.25	0.40	0.50	15	6	8	16	33	30	30	38	27	14	53	9.5	0.3
DSRM10UP	M10 (x1.50)	0.70	0.90	18	10	8	16	33	30	30	38	27	14	53	9.5	0.3
DSRM12UP	M12 (x1.75)	1.05	1.30	21	15	8	16	33	30	30	38	27	14	53	9.5	0.3
DSRM14UP	M14 (x2)	1.40	1.80	23	30	8	20	33	40	45	53	38	17	76	13	0.9
DSRM16UP	M16 (x2.5)	2.00	2.30	27	50	8	20	45	40	45	53	38	17	76	13	0.9
DSRM18UP	M18 (x2.5)	2.30	2.30	27	70	8	20	45	40	45	53	38	17	76	13	0.9
DSRM202t5UP	M20 (x2.5)	2.50	2.50	30	100	8	20	45	40	45	53	38	17	76	13	0.9
DSRM203t2UP	M20 (x2.5)	2.90	3.20	25	100	14	24	62	55	60	83	55	25	115	19	2.6
DSRM22UP	M22 (X2.5)	3.50	4.50	33	120	14	24	62	55	60	83	55	25	115	19	2.6
DSRM24UP	M24 (X3)	4.40	5.50	36	160	14	24	62	55	60	83	55	25	115	19	2.6
DSRM27UP	M27 (X3)	5.70	6.00	40	200	14	24	62	55	60	83	55	25	115	19	2.7
DSRM306T3UP	M30 (x3.5)	6.00	6.30	45	250	14	24	62	55	60	83	55	25	115	19	2.7
DSRM308TUP	M30 (x3.5)	6.70	8.00	45	250	14	24	80	77	78	83	71	26	141	28	5.4
DSRM36UP	M36 (x4)	8.00	8.50	54	320	14	24	80	77	78	83	71	26	141	28	5.4
DSRM42UP	M42 (X4.5)	8.50	9.00	63	400	14	24	80	77	78	83	71	26	141	28	5.5
PART NUMBER	THREAD (DIA)	SF 5:1 WLL (lbs)	SF 4:1 WLL (lbs)	STANDARD L1 (mm)	TORQUE (ft/lbs)	S1 (mm)	S2 (mm)	A (mm)	B (mm)	C (mm)	D (mm)	E (mm)	F (mm)	G (mm)	H (mm)	WEIGHT (KG)
DSR1/4UP	UNC 1/4-20	330	450	13	3	8	16	32	30	30	38	27	14	53	9.5	0.3
DSR5/16UP	UNC 5/16-18	1,000	1,200	15	5	8	16	33	30	30	38	27	14	53	9.5	0.3
DSR3/8UP	UNC 3/8-16	1,300	1,600	17	8	8	16	33	30	30	38	27	14	53	9.5	0.3
DSR1/2UP	UNC 1/2-13	2,400	2,800	21	12	8	16	33	30	30	38	27	14	53	9.5	0.3
DSR5/8UP	UNC 5/8-11	3,900	4,900	27	40	8	20	45	40	45	53	38	7	76	13	0.9
DSR3/4UP	UNC 3/4-10	5,250	5,250	30	80	8	20	45	40	45	53	38	17	76	13	0.9
DSR7/8UP	UNC 7/8-9	7,900	9,800	33	90	14	24	62	55	60	83	55	25	115	19	2.5
DSR1UP	UNC 1-8	11,200	12,500	36	125	14	24	62	55	60	83	55	25	115	19	2.6
DSR11/8UP	UNC 1-1/8-7	11,500	13,000	42	160	14	24	62	55	60	83	55	25	115	19	2.6
DSR11/4UP	UNC 1-1/8-7	13,500	13,500	45	200	14	24	62	55	60	83	55	25	115	19	2.7

Codipro Gradup DSS Double Swivel Shackles

Specially Designed for Lifting and Turning Under Heavy Load

CE

Gradup

Features:

- Large shackle for easy secure connection directly to crane hook
- Compact and Ergonomic; requires less clearance
- Tightens with allen wrench
- Double articulation allows perfect alignment with the sling
- Standard in Metric and Inch
- Stainless Steel, adaptor and special thread options available as special order

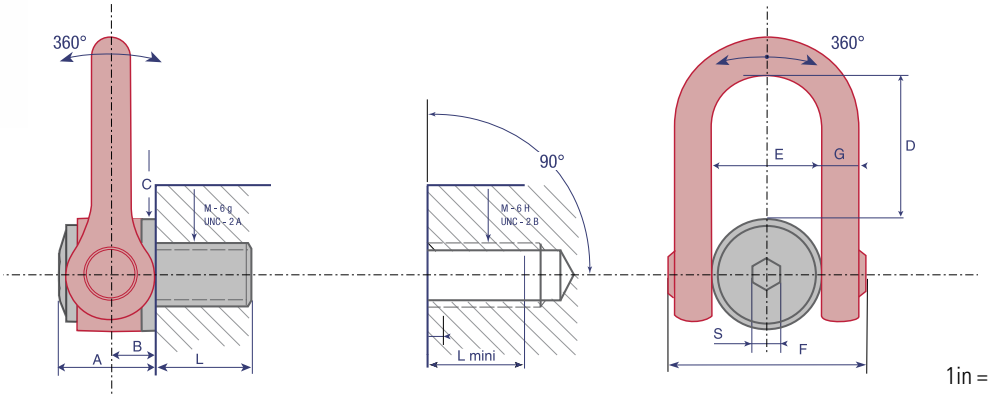

1in = 25.4mm

PART NUMBER	THREAD (DIA)	SF 5:1 WLL (t)	SF 4:1 WLL (t)	STANDARD L1 (mm)	TORQUE N.m	S (mm)	A (mm)	B (mm)	C (mm)	D (mm)	E (mm)	F (mm)	G (mm)	WEIGHT (KG)
DSSM24UP	M24 (x3)	4.50	5.50	36	160	19	61	31	70	104	73	149	33	5.4
DSSM30UP	M30 (x3.5)	7.70	8.50	45	250	19	61	31	70	104	73	149	33	5.5
DSSM33UP	M33 (x3.5)	8.50	10.50	50	250	19	61	31	70	104	73	149	33	5.5
DSSM36UP	M36 (x4)	11.00	12.00	54	320	19	61	31	70	104	73	149	33	5.5
DSSM36X3UP	M36 (x3)	11.00	12.00	54	320	19	61	31	70	104	73	149	33	5.5
DSSM39UP	M39 (x4)	12.00	14.00	58	320	19	61	31	70	104	73	149	33	5.7
DSSM42UP	M42 (4.5)	13.00	15.00	63	400	19	61	31	70	104	73	149	33	5.8
DSSM42X3UP	M42 (x3)	13.00	15.00	63	400	19	61	31	70	104	73	149	33	5.8
DSSM45UP	M45 (x4.5)	14.50	16.00	63	400	19	61	31	70	104	73	145	33	5.9
DSSM48UP	M48(x5)	17.00	20.00	68	600	19	79	38	90	125	91	182	45	11.0
DSSM48X3UP	M48(x3)	17.00	20.00	68	600	19	79	38	90	125	91	182	45	11.0
DSSM48X4UP	M48(x4)	17.00	20.00	68	600	19	79	38	90	125	91	182	45	11.0
DSSM52UP	M52 (x5)	19.00	20.00	68	600	19	79	38	90	125	91	182	45	11.2
DSSM56UP	M56 (x5.5)	22.00	25.00	78	600	19	79	38	90	125	91	182	45	11.3
DSSM56X4UP	M56 (x4)	22.00	25.00	78	600	19	79	38	90	125	91	182	45	11.4
DSSM64UP	M64 (x6)	25.00	32.10	90	600	19	79	38	95	125	91	182	45	12.2
DSSM64X4UP	M64 (x4)	25.00	32.10	90	600	19	79	38	95	125	91	182	45	12.2
DSSM72UP	M72 (x6)	22.00	25.00	90	600	19	79	38	95	125	91	182	45	14.0
DSSM72X4UP	M72 (x4)	22.00	25.00	90	600	19	79	38	95	125	91	182	45	14.0
DSSM80UP	M80 (x6)	25.00	32.10	90	600	19	79	38	100	125	91	182	45	15.0
DSSM90UP	M90 (x6)	25.00	32.10	90	600	19	79	38	100	125	91	182	45	15.5
DSSM100UP	M100 (x6)	25.00	32.10	90	600	19	79	38	110	125	91	182	45	16.50
PART NUMBER	THREAD (DIA)	SF 5:1 WLL (lbs)	SF 4:1 WLL (lbs)	STANDARD L1 (mm)	TORQUE (foot-lbs)	S (mm)	A (mm)	B (mm)	C (mm)	D (mm)	E (mm)	F (mm)	G (mm)	WEIGHT (KG)
DSS1UP	UNC 1"-8	10,000	13,000	36	125	19	61	31	70	104	73	149	33	5.4
DSS11/4UP	UNC 1-1/4"-7	15,000	19,000	45	200	19	61	31	70	104	73	149	33	5.4
DSS13/8UP	UNC 1- 3/8"-6	21,000	22,000	54	240	19	61	31	70	104	73	149	33	5.4
DSS11/2UP	UNC 1-1/2"-6	22,000	27,000	54	240	19	61	31	70	104	73	149	29	5.4
DSS13/4UP	UNC 1-3/4"-5	27,000	33,000	63	300	19	61	31	70	104	73	149	33	5.4
DSS2UP	UNC 2"- 4 1/2	38,000	50,000	76	450	19	79	38	90	125	91	182	45	11.1
DSS21/2UP	UNC 2-1/2"-4	48,500	53,000	90	450	19	79	38	95	125	91	182	45	12.2

Codipro Gradup MEGADSS Double Swivel Shackles

Specially Designed for Lifting and Turning Under Loads up to 50 Tons

Features:

- Large shackle for easy secure connection directly to crane hook
- Compact and Ergonomic; requires less clearance
- Tightens with allen wrench
- Double articulation allows perfect alignment with the sling
- Standard in Metric and Inch
- Stainless Steel, adaptor and special thread options available as special order

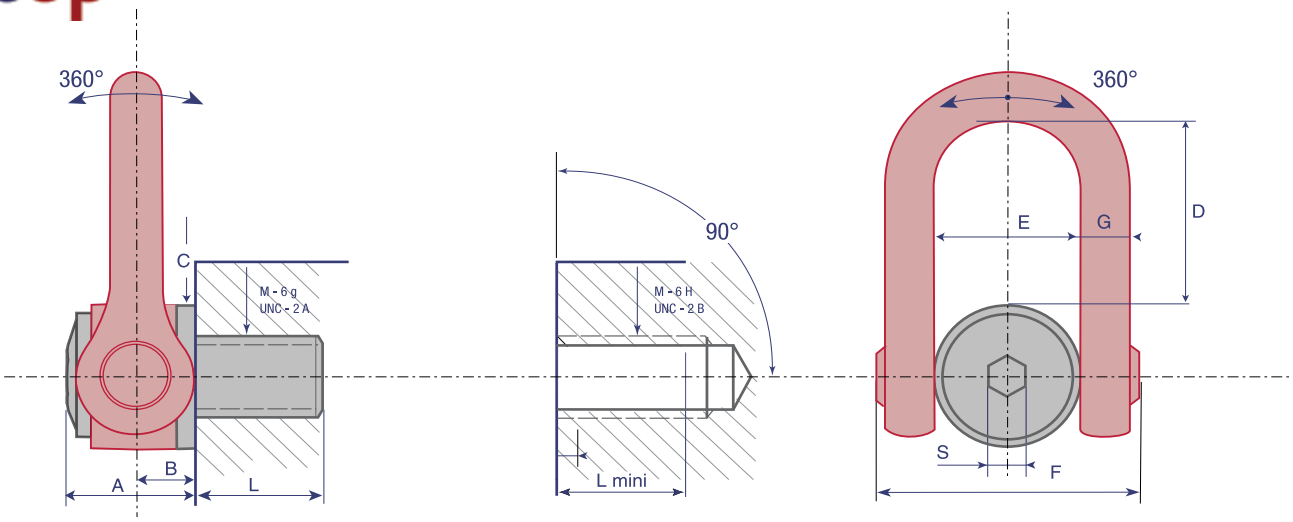

1in = 25.4mm

PART NUMBER	THREAD (DIA)	SF 5:1 WLL (lbs)	SF 4:1 WLL (lbs)	STANDARD L1 (mm)	TORQUE N.m	S (mm)	A (mm)	B (mm)	C (mm)	D (mm)	E (mm)	F (mm)	G (mm)	WEIGHT (KG)
MEGADSSM64UP	M64 (x6)	26.00	33.00	100	600	36	127	64	140	195	143	278	69	42.0
MEGADSSM72UP	M72 (x6)	28.00	35.00	110	700	36	127	64	140	195	143	278	69	43.0
MEGADSSM72X4UP	M72 (x4)	28.00	35.00	110	700	36	127	64	140	195	143	278	69	43.0
MEGADSSM80UP	M80 (x6)	32.00	40.00	120	800	36	127	64	140	195	143	278	69	44.5
MEGADSSM90UP	M90 (x6)	36.00	45.00	135	900	36	127	64	140	195	143	278	69	46.5
MEGADSSM100UP	M100 (x6)	48.00	60.00	150	1000	36	127	64	140	195	143	278	69	49.0
PART NUMBER	THREAD (DIA)	SF 5:1 WLL (lbs)	SF 4:1 WLL (lbs)	STANDARD L1 (mm)	TORQUE (foot/lbs)	S (mm)	A (mm)	B (mm)	C (mm)	D (mm)	E (mm)	F (mm)	G (mm)	WEIGHT (KG)
MEGADSS23/4UP	UNC 2-3/4" - 3/8-6	60,000	75,000	105	520	36	127	64	140	195	143	278	69	42.5
MEGADSS3UP	UNC 3" - 1/2-6	64,000	80,000	115	520	36	127	64	140	195	143	278	69	43.0
MEGADSS31/4UP	UNC 3-1/4"- 3 1/2	72,000	90,000	125	590	36	127	64	140	195	143	278	69	44.5
MEGADSS31/2UP	UNC 3-1/2"- 1/2-4	76,000	95,000	135	665	36	127	64	140	195	143	278	69	46.0
MEGADSS33/4UP	UNC 3-3/4"- 1/2-4	80,000	100,000	145	740	36	127	64	140	195	143	278	69	47.0
MEGADSS4UP	UNC 4"- 1/2-4	88,000	110,000	150	740	36	127	64	140	195	143	278	69	49.0

Codipro Gradup CSS Central Safety Shackles

Specially Designed for Lifting and Turning Loads up to 55 Metric Tons

Features:

- Large eye on the shackle for easy connections
- Compact and Ergonomic base; requires less clearance
- Easy to attach and use
- Individual engraving
- Delivered with a certificate of conformity for each shackle

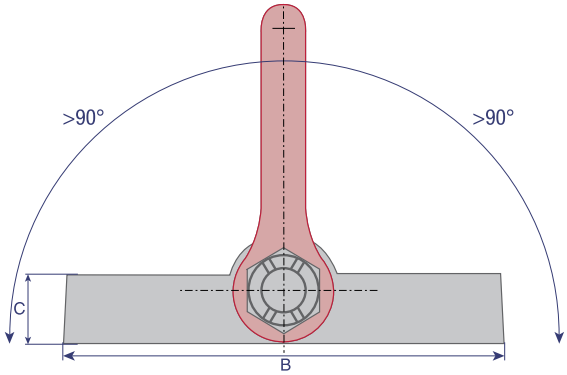

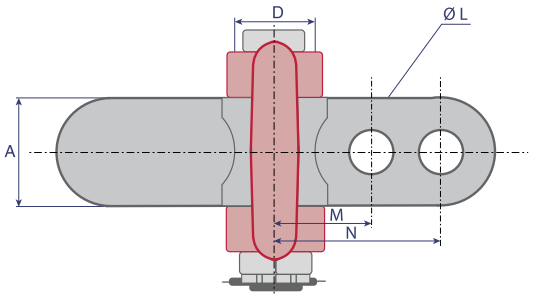

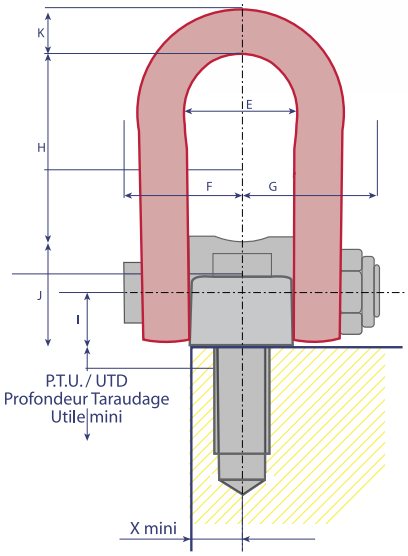

PART NUMBER	WORK LOAD LIMIT (TO)	X mini	A	B	C	D	E	F	G	H	I	J	K
CSS20T	44,000	40	80	220	50	62	90	88	98	132	38	76	41
CSS32T	70,950	40	80	330	50	62	90	88	98	132	38	76	41
CSS55T	121,000	53	105	540	85	175	184	160	170	267	85	175	79.5

Drilling and screw specifications
DIN912-12.9

PART NUMBER	DRILLING			PTU/UTD	SCREW					
								HEAD		
	Ø L	M	N	USEFUL MIN THREAD DEPTH	QTY	THREAD	LENGTH	Ø	HEIGHT	N.m
CSS20T	38	70	/	54	2	M36	100	54	36	600
CSS32T	38	70	130	54	4	M36	100	54	36	600
CSS55T	50	133	210	85	4	M48	160	72	48	600

With tens of thousands of products to choose from, DME is your one-stop shop for everything molding. From complex undercuts solutions and plate control to standard pins, bushings and interlocks, the DME line of mold components will help you build or rebuild your mold base inside out, top to bottom. Industrial Supplies, Mold Bases, MUD Quick-Change, Control Systems, and Hot Runner solutions round out our extensive offering to truly be your one-stop shop.

DME Company
42827 Irwin Dr.
Harrison Twp., MI 48045
800-626-6653 *toll-free tel*
248-398-6000 *tel*
www.DME.net *web*
DME@DME.net e-mail

DME Canada
41 Todd Road
Georgetown, Ontario
Canada L7G 4R8
800-387-6600 *toll-free tel*
905-677-6370 *tel*
DME_Canada@DME.net e-mail

DME Mexico / South America
Circuito el Marques Notre, No.55
Parque Industrial El Marqués
El Marqués, Querétaro, CP 76246
52.442.713.5666 *tel*
DME_MX@DME.net

eSTORE
store.dme.net
Shop online 24/7.

© DME 2025
Printed in U.S.A.
CPRO-8.1.25