DME®

flosense®

FLEXIBLE FLOW MONITORING

FLEXIBLE FLOW MONITORING
CRITICAL VISIBILITY WITH EASE

Flosense

Maximize Molding Performance

Now more than ever, molders rely on the control and optimization of the key operating parameters. By doing so, it's possible to fully exploit the capabilities of the mold design and deliver optimum production results.

Cooling performance of a tool can be overlooked in the design stage and later through limited visibility and control in the production process. By adding the Flosense Water Monitoring System to your molding process, you are able to analyze the cooling and run your tool at the highest performance level possible. Deviations from target are quickly and easily identified and addressed within seconds.

RESULT: Higher Output of Quality Parts improving your overall investment economics.

Balanced Thinking

Core to the DME approach is its integrated management of the thermal transfer process. In the melt phase care is taken to maintain consistent but not excessive heat, then, at the time of packing, efficiently cooling the part. By managing this entire process we are able to maximize the production of high quality parts.

MOLD TEMPERATURE CURVE

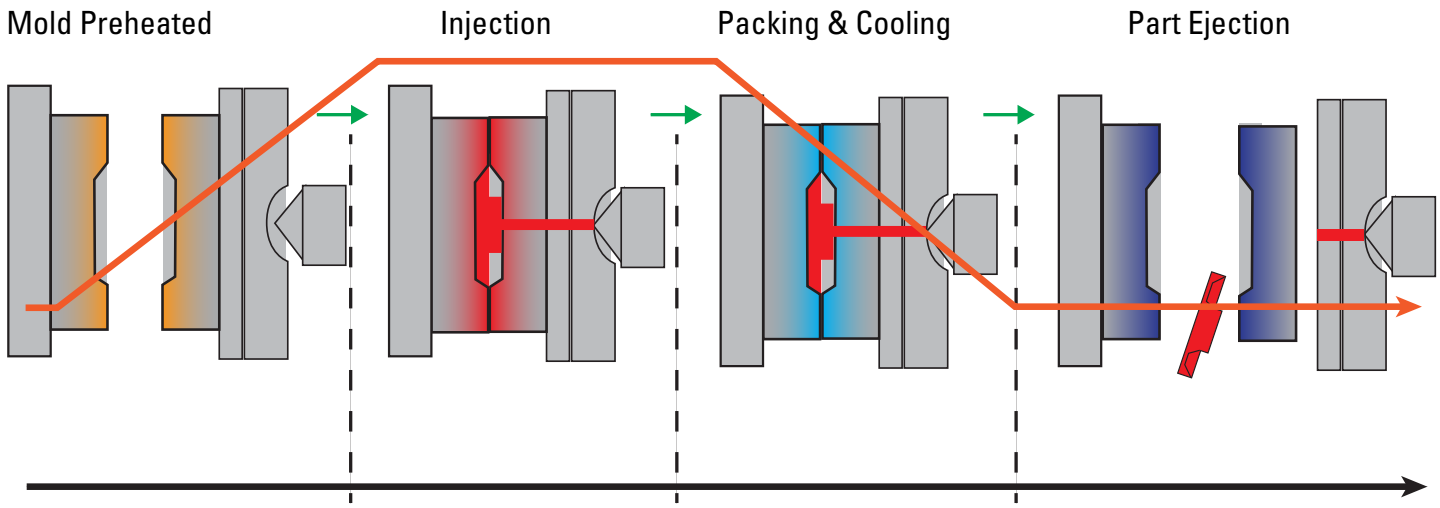

Flosense

Flosense measures flow, temperature and pressure on a single flow channel using a single combined sensor. When used in an injection molding circuit, Flosense also has the ability to connect to a second temperature and pressure sensor.

Flosense calculates and displays the difference in temperature and pressure known as 'Delta T' and 'Delta P' with one sensor on the 'flow' and one on the 'return''.

Using these values, Flosense provides an indication of the stability of the process and checks the efficiency, identifying wasted energy and variations in pressure which could indicate leaks or blocked waterways.

Flosense is designed to be installed in various locations within the cooling circuit including the main water supply, the mold heater, critical cooling channels or distribution manifolds.

Quick to install and easy to set-up, Flosense is a critical component in any injection molding configuration and should form part of any setup where cost control and quality are key considerations.

flosense® is a Registered Trademark of MouldPro

Flosense 1.0

Pressure loss is caused by hoses, fittings and valves and will affect the productivity.

Difference between inlet pressure and return pressure is measured as Delta P.

Variation in Delta P could indicate pump failure, blocked waterway, leaks etc.

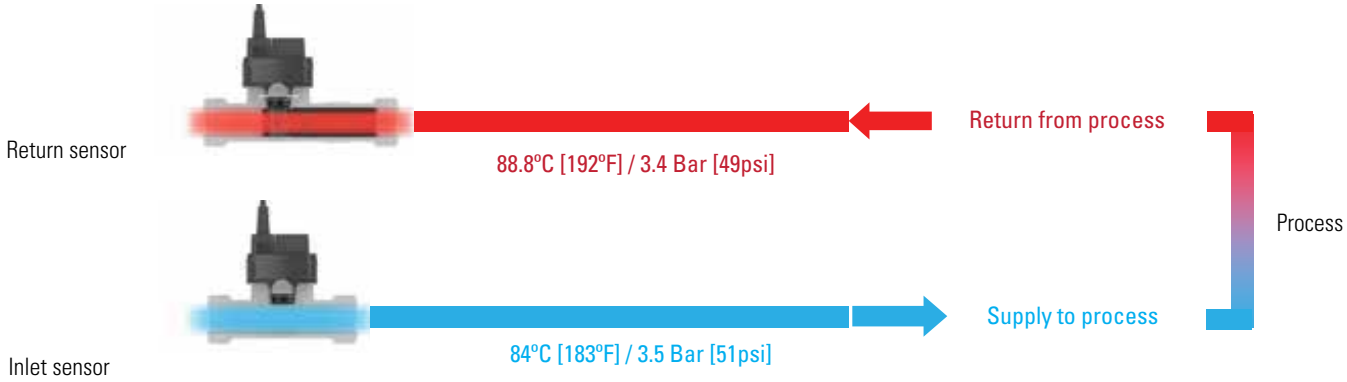

As the cooling water passes through the mould it transfers heat from the steel into the cooling water. The more turbulent the flow the more efficient this process of cooling.

Difference between inlet temperature and return temperature is measured as Delta T.

Sudden variation in the Delta T may be caused by a faulty heater/cooler, blocked channel, scale build up etc.

Flosense, provides visibility of key cooling circuit metrics, improves efficiency, enhances productivity and profitability.

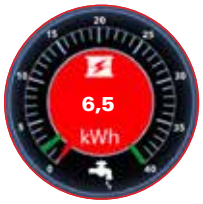

ENERGY TRANSFER INDICATOR

Heat is transfered from the mold through the water channels, Flosense calculates the heat transfer as energy units BTU or kWh. This feature illustrates the effeciency of the process.

TURBULENT FLOW INDICATOR

Often regarded as a key indicator in the efficiency of a mold cooling circuit, Flosense is fitted with a turbulent flow indicator. The unit will indicate laminar, transitional and turbulent flow as well as monitoring the Reynolds number, based on flow diameter and percentage glycol in the system.

Improving the flow from laminar to turbulent can increase the heat transfer efficiency by up to 500%.

Flosense, provides features and interfaces to monitor, analyse and verify data, essential for your productivity and quality.

ALARM OUTPUT

With programmable alarm limits on flow, temperature and pressure any variation in the values being monitored will trigger an on-screen alarm. An external alarm output signal can be connected to auxiliary equipment which could be a visual or audible beacon, the mold heater or the injection molding machine.

Even in a 'hose burst' situation the unit will identify a sudden loss of pressure and the unit can either be connected to an alarm or could be used to automatically shut down the mold heater.

DATA RECORDING

Data is recorded and stored in the internal memory enough to display data for the previous 30 days.

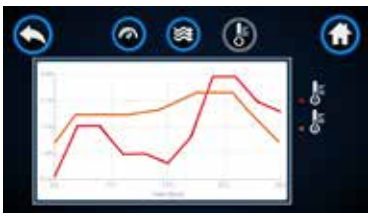

Flow, Temperature and Pressure are logged and may be viewed in the graphing screen.

The last 30 days of data is recorded and stored on the internal memory.

DATA EXPORT

It is also possible to download the data to a laptop using the integrated USB port for further analysis.

The data is stored as text file and can be analysed using excel or other analysing software.

Single Flow Sensor Kit

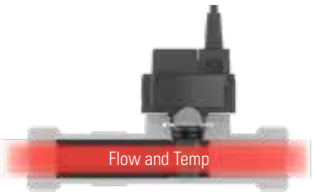

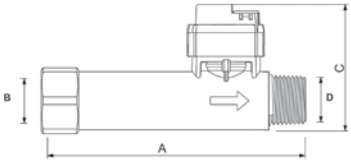

ITEM NUMBER	FLOW CAPACITY GPM	A	CONNECTION B	C	D	MAX TEMPERATURE
FSE120K	0.27 - 5.2	4″	G 1/2″	2-1/4″	1/4″	248°F
FSE120KHT						320°F
FSE240K	0.53 -10.4					248°F
FSE240KHT						320°F

KIT INCLUDES
- Touch Screen
- Power Supply
- Sensor (flow+temp)
- Cable (11 feet)
- USB Cable

Note: All flow pipes are supplied with NPT Adaptors

Single Multi Sensor Kit

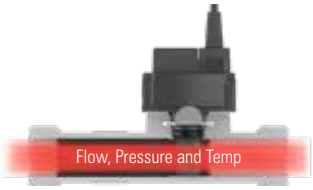

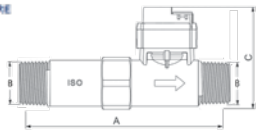

ITEM NUMBER	FLOW CAPACITY GPM	A	CONNECTION B	C	MAX TEMPERATURE	PRESSURE RANGE
FS115K	0.53 - 5.23	4 1/4″	G 3/4″	2-1/4″	248ºF	0-145 PSI
FS240K	1.06 -10.6					
FS5100K	2.6 - 26.4	5″	G 1″	2-5/8″		
FS10200K	5.3 - 52.8	5 3/8″	G 1-1/4″	3″		

KIT INCLUDES
- Touch Screen
- Power Supply
- Sensor (flow+temp)
- Cable (11 feet)
- USB Cable

Note: All flow pipes are supplied with NPT Adaptors

Dual Multi Sensor Kit

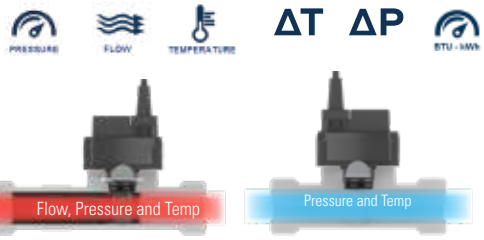

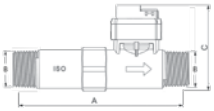

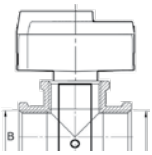

ITEM NUMBER	FLOW CAPACITY GPM	A	CONNECTION B	C	MAX TEMPERATURE	PRESSURE RANGE
FS11510K	0.53 - 5.23	4-1/4″	G 3/4″	2-1/4″	248ºF	0-145 PSI
FS24010K	1.06 -10.6					
FS510010K	2.6 - 26.4	5″	G 1″	2-5/8″		
FS1020010K	5.3 - 52.8	5-3/8″	G 1-1/4″	3″		

KIT INCLUDES
- Touch Screen
- Power Supply
- Sensor (flow+temp+pressure)
- Inlet Sensor (temp+pressure)
- 2 x Cables (11 feet)
- USB Cable

Note: All flow pipes are supplied with NPT Adaptors

Flosense 1.0

Multi Sensor Unit

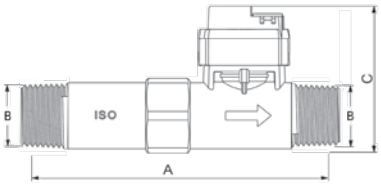

ITEM NUMBER	FLOW CAPACITY GPM	A	B*	C	MAX TEMPERATURE	HOSETAIL REF.
FS115	0.53 - 5.23	4-1/4″	G 3/4″	2-1/4″	248ºF	CFR3/4-13
FS240	1.06 -10.6					HT-316-2 / CFR3/4-19
FS5100	2.6 - 26.4	5″	G 1″	2-5/8″		CFR1-25 / CFR1-25
FS10200	5.3 - 52.8	5-3/8″	G 1-1/4″	3″		HT-316-4 / CFR1-1/4-32

Includes Flow Pipe and Multi Sensor (cable not included)

* Note: All flow pipes are supplied with NPT Adaptors

Flow Sensor Unit

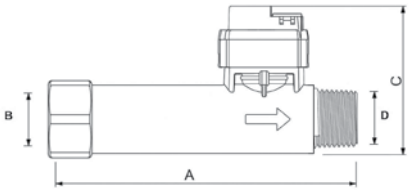

ITEM NUMBER	FLOW CAPACITY GPM	A	B*	C	D*	MAX TEMPERATURE
FSE120	0.27 - 5.2	4″	G 1/2″	2-1/4″	1/4″	248°F
FSE120HT						320°F
FSE240	0.53 -10.4					248°F
FSE240HT						320°F

Includes Flow Pipe and Multi Sensor (cable not included)

* Note: All flow pipes are supplied with NPT Adaptors

Accessories

Blank Plug

ITEM NUMBER	CONNECTION	SEAL
SSEC1	1″	FKM

Connection/Extension Cable

ITEM NUMBER	CONNECTION	LENGTH (MM)
FSEC1000	M8/M8	1000
FSEC2000		2000
FSEC5000		5000

Pressure Kits

ITEM NUMBER	BAR	THREAD	MAX TEMP
PS100G1/2	1-10	1/2″BSPP	248°F
PS100G1/2HT			320°F

Sensor Cable

ITEM NUMBER	CONNECTION	LENGTH (MM)
FSSC1200	M8	1200
FSSC2900		2900

Flosense 2.0

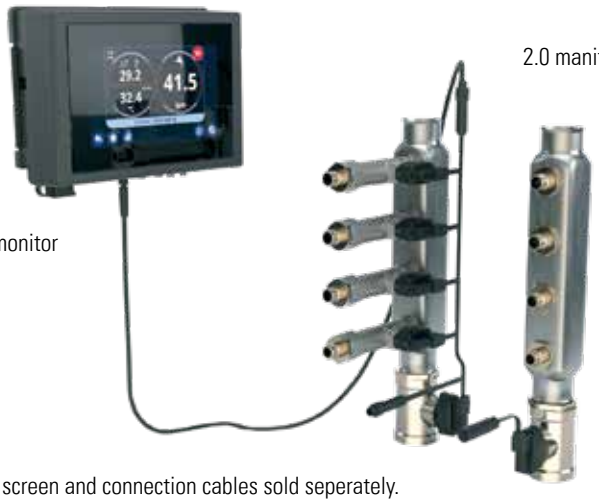

2.0 manifold set

FS7100 monitor

Dispplay screen and connection cables sold seperately.

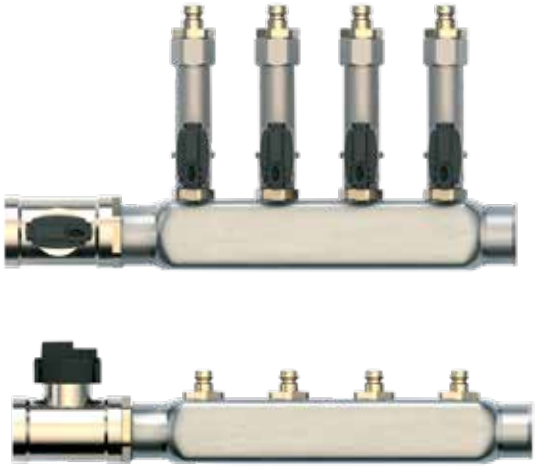

Separate Stainless Steel Flow / Return Manifolds complete with sensors.

Manifolds supplied as a pair

- One feed manifold with pressure and temperature sensor
- One return manifold with flow, temperature and pressure sensor

Complete unit with Pressure sensor installed on main inlet / return. Connect up to 4 manifolds to the touch screen in order to monitor uo to 48 separate cooling circuits. Use the alarm limits (and output) on flow and temperature to control the process stability and part quality.

Display Screen	Size	Manifold Inputs	Power Connection	Alarm Output	Interface
FS7100	7.1”	1	12V	Yes	OPC-UA

FLOW	**STANDARD SENSOR**	**HT SENSOR**
Measuring Range	0.132 - 3.1701 gpm	0.132 - 3.1701 gpm
	0.27 - 5.2 gpm	0.27 - 5.2 gpm
	0.53 - 10.4 gpm	0.53 - 10.4 gpm
Accuracy	(±1°F) in water, ±1% FS	(±1°F) in water, ±1% FS
TEMPERATURE		
Measuring Range	32-248°F	32-320°F
Accuracy	59-194°F ±0.5 K	59-194°F ±0.5 K
	32-248°F ±1 K	32-248°F ±1 K
		248-320 °F ± 2 K
PRESSURE		
Measuring range	0-145 psi	
Accuracy	± 2.5% FS	

Flosense 2.0

1" MANIFOLDS

ITEM NO. PREFIX	FLOW SENSOR RANGE option (l/m)												
	0.6-12	1-20	2-40	PORTS	A	A2	B	L	L1	L2	H	H2	
F2M4	612	120	240	4	1/2"	1"	40	315	50	45	140	66.5	248°F
F2M4HT				4				315					320°F
F2M6				6				415					248°F
F2M6HT				6				415					320°F
F2M8				8				515					248°F
F2M8HT				8				515					320°F
F2M10				10				615					248°F
F2M10HT				10				615					320°F
F2M12				12				715					248°F
F2M12HT				12				715					320°F

How to order: Specify Item Number by combining Itember number prefix and flow sensor range. Example: F2M4612
HT= High Temperature

Supplied as a pair of manifolds
- One feed manifold with pressure and temperature sensor
- One return manifold with flow, temperature and pressure sensor

1-1/4" MANIFOLDS

ITEM NO. PREFIX	FLOW SENSOR RANGE option (l/m)												
	0.6-12	1-20	2-40	PORTS	A	A2	B	L	L1	L2	H	H2	
F2M4L	612	120	240	4	1/2"	1-1/4"	50	315	50	45	150	74.1	248°F
F2M4HTL				4				315					320°F
F2M6L				6				415					248°F
F2M6HTL				6				415					320°F
F2M8L				8				515					248°F
F2M8HTL				8				515					320°F
F2M10L				10				615					248°F
F2M10HTL				10				615					320°F
F2M12L				12				715					248°F
F2M12HTL				12				715					320°F

How to order: Specify Item Number by combining Itember number prefix and flow sensor range. Example: F2M4612
HT= High Temperature

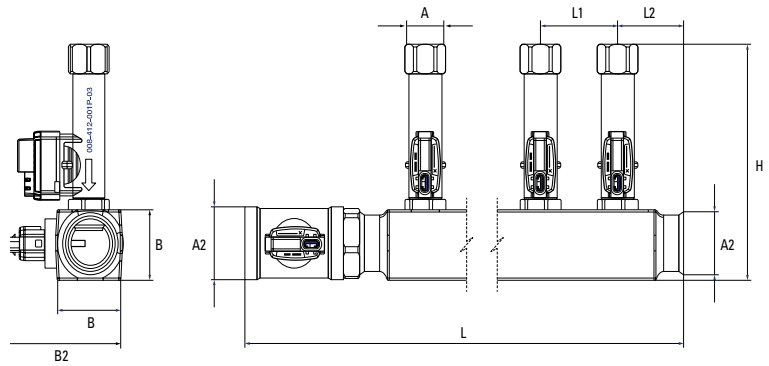

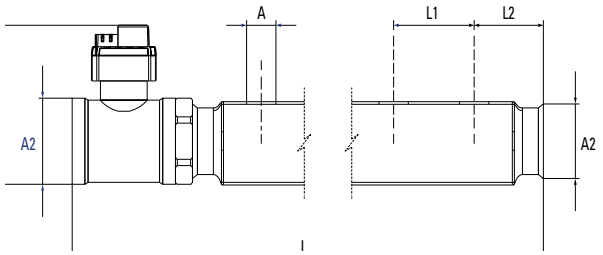

See page 14 for Accessories

Flosense 3.0
DIGITAL FLOW REGULATOR

Complete unit with Pressure sensor installed on main inlet.

Update your old flow regulator with today's cutting edge technology.

At last you can see real flow measurements at a glance, and use the alarm limits (and output) on flow and temperature to control the process stability and part quality.

TOUCH SCREEN

flow temperature pressure

Upgrade your molding machine with new digital flow regulator and improve your productivity.

Replacing traditional analogue manual flow regulators with new digital flow regulator technology will give you many advantages such as:

- Digital monitoring of Flow, Temperature and Pressure
- Alarm Output
- Higher flow capacity
- Higher temperature range
- Data storage and export
- Faster Mold changeovers
- OPC-UA / Euromap interface

Touch Screen mounted on the manifold.
Equipped with power, alarm, USB and Ethernet connections.

Size	Manifold Inputs	Power Connection	Alarm Output	Interface
7.1"	1	12V	Yes	OPC-UA

The main screen will show all circuits with information about flow and temperature. The main inlet and outlet will also show including pressure.

Data is stored in the internal memory and can be displayed in graphical view for each circuit. Data can also be exported for external use.

By clicking on a specific circuit you will see detailed information, including delta T (heat transfer) of the specific channel. Also, turbulent flow indicator is included.

The system is equipped with Audit Log to keep track of all events including user ID tracer.

Flosense 3.0

ITEM NUMBER	PORTS	LENGTH	LENGTH 1	WIDTH	HEIGHT	B		
FFRM4120	4	8-2/3"	10"	7.87"	4.84"	8"	0.27-5.2 gpm	248°F
FFRM4240							0.53-10.4 gpm	
FFRM6120	6	11-1/3"	12-1/2"	7.87"	4.84"	8"	0.27-5.2 gpm	248°F
FFRM6240							0.53-10.4 gpm	
FFRM8120	8	14.00"	15-1/8"	7.87"	4.84"	8"	0.27-5.2 gpm	248°F
FFRM8240							0.53-10.4 gpm	
FFRM10120	10	16-2/3"	17-2/3"	7.87"	4.84"	8"	0.27-5.2 gpm	248°F
FFRM10240							0.53-10.4 gpm	
FFRM12120	12	19-1/5"	20-3/8"	7.87"	4.84"	8"	0.27-5.2 gpm	248°F
FFRM12240							0.53-10.4 gpm	

FLOW	STANDARD SENSOR
Measuring Range	0.27 - 5.2 gpm
	0.53 - 10.4 gpm
Accuracy	(±1°F) in water, ±1% FS
TEMPERATURE	
Measuring Range	32-248°F
Accuracy	59-194°F ±0.5 K
	32-248°F ±1 K
PRESSURE	
Measuring range	0-145 psi
Accuracy	± 2.5% FS

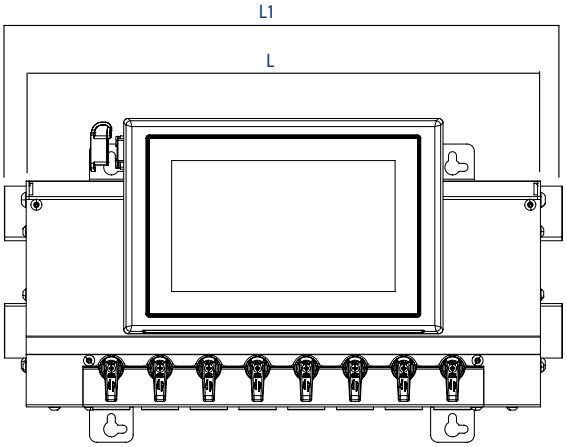

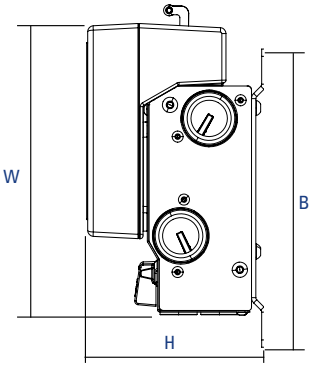

DISPLAY	
Type	Touch
Size	7.1"
Voltage	12-24 Volts
Data	USB + Ethernet
Communications	OPC UA
Internal Memory	Up to 30 days data (FIFO)

MATERIALS	
Modules	Nickel Plated DZR Brass (Corrosion resistant)
Main Feed	R1"
Circuits	R1/2"
Cover	Stainless Steel

See page 14 for Accessories

Flosense 4.0

Upgrade your molding machine with new digital flow manifold and improve your productivity.

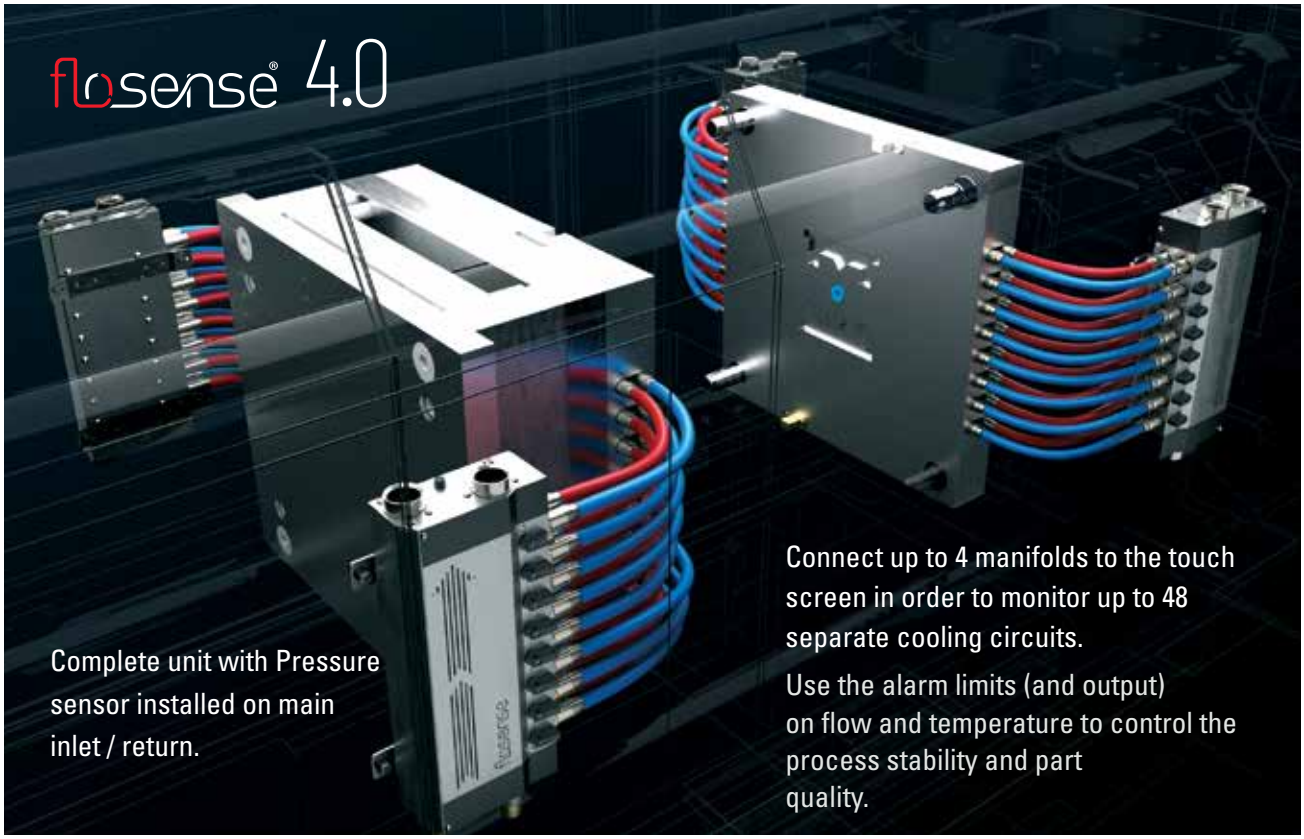

Complete unit with Pressure sensor installed on main inlet / return.

Connect up to 4 manifolds to the touch screen in order to monitor up to 48 separate cooling circuits.

Use the alarm limits (and output) on flow and temperature to control the process stability and part quality.

The main screen will show all circuits with information about flow and temperature. The main inlet and outlet will also show including pressure.

Data is stored in the internal memory and can be displayed in graphical view for each circuit. Data can also be exported for external use.

flow

temperature

pressure

By clicking on a specific circuit you will see detailed information, including delta T (heat transfer) of the specific channel. Also, turbulent flow indicator is included.

The system is equipped with Audit Log to keep track of all events including user ID tracer.

Flosense 4.0

- Touch Screen with 4 manifold inputs.
- Magnetic bracket for easy installation.
- Equipped with power, alarm, USB and Ethernet connections.

PART NUMBER	SIZE	MANIFOLD INPUTS	POWER CONNECTION	ALARM OUTPUT	INTERFACE
FS7100	7.1"	4	12V	Yes	OPC-UA

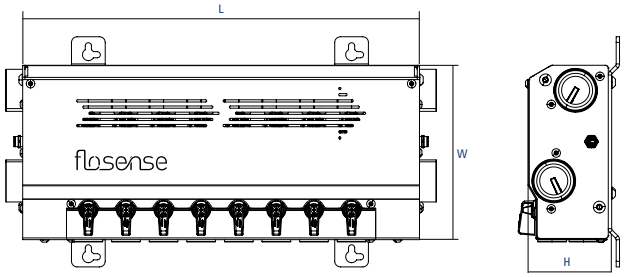

ITEM NUMBER	FLOW SENSOR RANGE		PORTS	LENGTH	WIDTH	HEIGHT	
	120 (xxx)	240 (xxx)					
F4M4(xxx)	0.27-5.2 gpm	0.53-10.4 gpm	4	8-2/3"	6.10"	2.83"	248°F
F4M4HT(xxx)							320°F
F4M6(xxx)			6	11-1/3"	6.10"	2.83"	248°F
F4M6HT(xxx)							320°F
F4M8(xxx)			8	14.00"	6.10"	2.83"	248°F
F4M8HT(xxx)							320°F
F4M10(xxx)			10	16-2/3"	6.10"	2.83"	248°F
F4M10HT(xxx)							320°F
F4M12(xxx)			12	19-1/5"	6.10"	2.83"	248°F
F4M12HT(xxx)							320°F

Ordering Example: Item Number + Flow Sensor Range (xxx) - F4M4120
Cables ordered seperately - Cables options shown on next page.

HT = High Temperature.
Complete unit with Pressure sensor installed on main inlet / return. Connect up to 4 manifolds to the touch screen in order to monitor up to 48 separate cooling circuits.
Use the alarm limits (and output) on flow and temperature to control the process stability and part quality.

Flosense 2.0, 3.0 & 4.0

Accessories / Replacement Parts

ITEM NUMBER	DESCRIPTION	CONNECTION	SEAL
SSEC1	Blank Plug	1″	FKM
SSEC1-1/4	Blank Plug	1-1/4″	FKM
7042-16-16	Converter	1″ MBSP to 1″ FNPT	

Blank Plug

Converter

Sensors

ITEM NUMBER	FLOW	PRESSURE
FS4120	0.28-5.28 GPM	NA
FS4120160		
FS4240	0.52-10.56 GPM	
FS4240160		
FS4RPS	NA	14.5-145 PSI
FS4RPS160		

ITEM NUMBER	CONNECTION	LENGTH (ft)
FS3PEC1000	M8/M8	3
FS3PEC2000		6.5
FS3PEC5000		16
FS3PC10000		33
FSAC5000* (alarm)	M8 (4 pins used)	16.4

* NOTE: Alarm cable connects to Flosense models 1.0, 2.0, 3.0 & 4.0. The alarm outputs / pin-outs vary from model to model. Consult the user manual for appropriate cable connection

Connection/Extension Cables

Screens and Manidfolds sold seperatrly

ITEM NUMBER	CONNECTION
FSC100	Cart w/ Casters

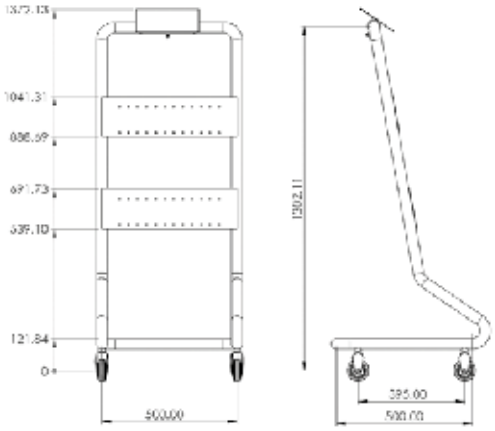

Flosense Mobile Cart is a great addition to any mold maintenance area. Add any Flosense manifolds and screen to bench mark flow rates and ensure cooling passage are at optimal flow rates. This handy cart can also be wheeled out onto the floor and connected to any production mold for precise cooling data instantly.

Mold Try Out Kits

Kit contains: (1) 8-zone Manifold, Intergrated 7" Screen, Power Supply, Portable Suitcase

You can now benefit from a unique opportunity to purchase a fully functional Mold Try Out Kit.
Ruling out and/or identifying issues of coolant flow is made easy with this portable 8-zone manifold. The plastic protective case allows for safe transport to your mold try out location to ensure coolant is flowing as it should or make adjustments to dial in the best possible cycle time.

ITEM NUMBER	DESCRIPTION
FFRM8612TOK	MOLD TRY OUT KIT, 3.0 MANIFOLD, 8-ZONE 0.6-12 L/M 248°F MAX
FFRM8120TOK	MOLD TRY OUT KIT, 3.0 MANIFOLD, 8-ZONE 1-20 L/M 248°F MAX
FFRM8240TOK	MOLD TRY OUT KIT, 3.0 MANIFOLD, 8-ZONE 2-40 L/M 248°F MAX

DME Cooling Connectors & Hose

Connectors and hose for Flosense Flow Monitors available for initial installation or maintenance.

DESCRIPTION	ITEM NUMBER	FITS HOSE I.D.	HOSE STEM I.D.	USED WITH: MALE EXTENSION PLUGS
STRAIGHT STEM FLOW-THRU	JSL0306	3/8	1/4	N912A (300 series) N1612A (500 series)
	JSL0308	1/2	3/8	
	JS306	3/8	1/4	
	JS308	1/2	3/8	

DESCRIPTION	Item Number	Hose I. D.	Hose O. D.	Max. W. P.	Min. Burst	Feet Per Reel
Parker Standard Duty Push-Lok Hose	801-6-(color)	3/8"	.63	350psi	1400psi	450
	801-8-(color)	1/2"	.78	300psi	1200psi	300
	Specify color - Red, Blue, Gray, Yellow, Green or Black					
Parker Hi-Temp Push-Lok Hose	836-6(color)	3/8"	.62	400psi	1000psi	450
	836-8(color)	1/2"	.78	400psi	1000psi	300
	Specify color - Black or Blue					

DME Cooling Services

Cooling often is the longest portion of the molding cycle, opening the door for significant improvements and savings. Our engineering staff is standing by to help you optimize your cooling system design with the aid of advanced Mold Flow software and FEM. This process will identify cooling channel location (proximity), diameter (flow) / turbulence control allowing you to maximize profitability over the lifecycle of the tool.

Mold Productivity Lifecycle

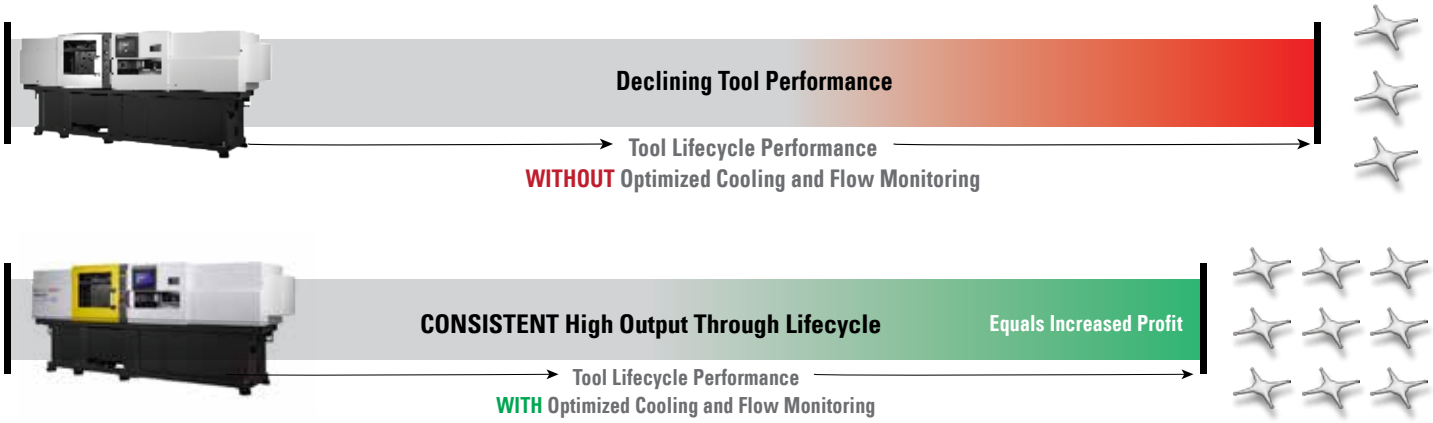

Contact DME Engineering at dme_mech_eng@dme.net for more information and services.

DME Company LLC
42827 Irwin Dr.
Harrison Twp., MI 48045
800-626-6653 *toll-free tel*
248-398-6000 *tel*
www.DME.net *web*
DME@DME.net *e-mail*

DME Canada
41 Todd Road
Georgetown, ONT
Canada L7G 4R8
800-387-6600 *toll-free tel*
905-677-6370 *tel*
DME_Canada@DME.net *e-mail*

DME Mexico / South America
Circuito el Marques Notre, No.55
Parque Industrial El Marqués
El Marqués, Querétaro, CP 76246
52.442.713.5666 *tel*
DME_MX@DME.net *e-mail*

eSTORE
dme.net/estore
Shop online 24/7

© DME 2026
Printed in U.S.A.

FLOS-2.13.26