DME LIFETIME LOCK

DME®

LIFETIME
Roller Locks

PREMIUM LOCKS
FOR THE LIFETIME OF YOUR MOLD

DME LIFETIME ROLLER LOCKS

DME ALIGNMENT TECHNOLOGIES

To take full advantage of lean manufacturing practices and increase productivity today's molders demand high reliability of equipment and tooling. Alignment of the mold during the process is critical to the reliability and the achievement of high levels of O.E.E (Overall Equipment Effectiveness). This is especially challenging over the life-cycle of the tool as thermal expansion and general tooling precision can cause movement of the plates and effect molding performance . With poor alignment; part quality can suffer, cycle times can be reduced, unnecessary production downtime can occur and the tool itself can be damaged. All of these problems can minimized and profitability maximized using an interlock that has been tried and tested and, designed for the best possible lifetime performance.

CHALLENGES OF ALIGNMENT

HEAT VARIATION

Heat variations can cause misalignment of the mold over time. Managing temperature changes in stationary and movable mold halves is critical:

1. **Mold cooling, including the temperature differential between mold halves.**
   - Steel grows approximately 0.0000065 inch for every degree Fahrenheit of temperature differential. When A and B halves vary by as little as 20 deg F and the mold is 30 inches long, the difference in plate lengths is about 0.004 inch….. enough to start wearing of the alignment components. To extend mold life, try to keep the all of the mold plates (mold halves) at a consistent temperature.
2. **Hot runner system heating.**
   - Since these systems are driven by electric heaters, they can be a major contributor to mold temperature variations if proper cooling is overlooked.
3. **Insulator plates.**
   - As production begins, insulator plates (top and bottom of the mold) will create a temporarily controlled closed environment. But any heat generated within the mold will eventually migrate through the insulating materials into the press platens and affect the alignment of the mold halves.

PARTING LINE ALIGNMENT

Improper mold alignment can cause dimensional problems, flash, damaged components, or even a mold that won't run anymore.

Initial Engagement

Interlocks must be able to allow for interference/angled engagement as the movable platen tends to lean forward and sag out of alignment due to mold weight and the toggle function. Also the cavity/core alignment is influenced by the quality/condition and location of guide pins and bushings, if these components are worn or out of place the alignment of the movable and stationary haves will be off.

DME LifeTime Side Locks

Five degree =

0.0 00" interference fit

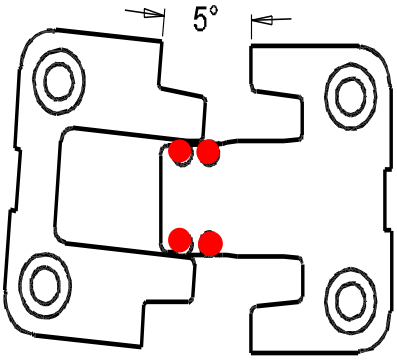

Standard Side Locks

One Tenth Degree =

.00022" Interference fit

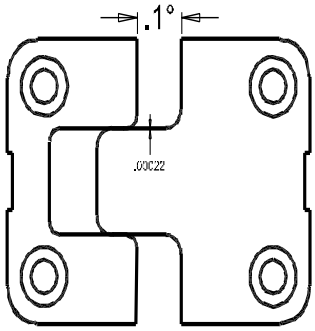

Two degree =

.0072" interference fit

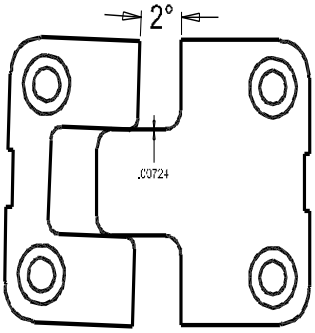

Initial Engagement

Interlocks must be able to allow for interference/angled engagement as the movable platen tends to lean forward and sag out of alignment due to mold weight and the toggle function. Also the cavity/core alignment is influenced by the quality/condition and location of guide pins and bushings, if these components are worn or out of place the alignment of the movable and stationary haves will be off. These components provide the primary alignment of the mold halves.

Early Alignment for Precision Shutoffs

Interlocks align mold halves to protect precision tapered shut off inserts from being damaged. This is especially true with cross over telescoping cavity and core inserts.

Final Lockup Holding Strength

Interlocks provide constrains to counter the pressure produced during injection ensuring the A and B plate do not shift which results in a constant molded part thickness and matched parting lines.

LifeLocks 3"
Penta-Lock Design

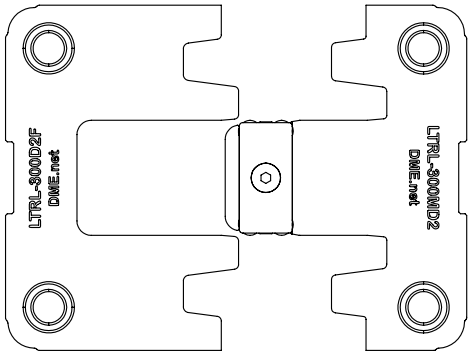

LifeLocks 1-2"
Triple Lock Design

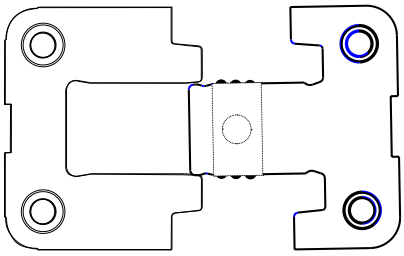

DME LIFETIME LOCK

THE BIG 3 REASONS
FOR LIFETIME LOCK SUCCESS

1. **Carbide Rollers Can Reduce Or Eliminate Galling During Initial Engagement**
   Movable platen tends to lean forward and sag out of alignment because of mold weight and the toggle function

Carbide Roller Bearings

2. **Early Alignment for Precision Shutoffs**
   Interlock aligns mold halves to protect precision tapered shut off inserts from being damaged. This is especially true with cross over telescoping inserts from one half to the other half

3. **Triple & Penta-Locking Configurations (Patented)**
   Constrains counter-pressure of the injection to ensure constant molded part thickness and matched parting lines, resulting in the most precise location and holding power on final lock-up in the industry.

Patent No. US 6,981,858 B2
Patent No. US 6,558,145 B2

3 Base Materials To Fit Your Application

Our standard lock made of D2 **outperforms the competition in 3 ways**, Longer lead for early engagement and protect for cross over shut off, carbide rollers reduce friction and ease early engagement when the mold halves come together, the triple locking design provides more bearing surface when the locks are fully engaged.

Our DC53 locks have all the same great features as standard locks with the added benefit to **withstand the demands of running high temperatures (700˚F) required for molding engineered resins**. Competitor locks will anneal and prematurely wear due to the higher heat. DME's DC53 lock will withstand this type off application with long life performance.

Our 440C stainless-steel locks have the same long lasting performance design features as our standard lock and have been developed to meet the requirements of clean room and packaging applications.

PERFORMANCE TESTED

Lab Testing

- Millions of Cycles
- Virtually No Wear
- Grease on rollers were still evident after 200,000 cycles

Field Production Testing

- Minimal wear after a million cycles or 14 months of fast cycle production
- No locks have seized or fractured
- Locks did not need position rotation

Benefits of DME's Patented Roller Lock

Precision Alignment Combing the Technology of:

- Straight
- Tapered
- Carbide Roller Bearing
- Made in 3 materials to fit your application needs.

Advantages

- Non-binding low friction alignment
- 30% earlier aligned engagement
- Final taper lock up strength
- Full Interchangeability male and female
- Retrofittable to industry standard foot-print, no additional machining required

ALIGN YOUR PRIORITIES

WITH THE LIFETIME LOCK ADVANTAGE

3-POINT COMPARISON

1

DME Carbide Rollers glide into position vs. conventional lock surfaces

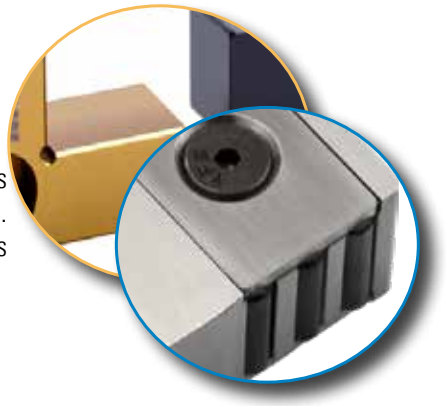

2

Elongated male section allows earlier engagement and more forgiving entrance angles.

3

Two additional locking features insure precise alignment versus a competitors single lock design.

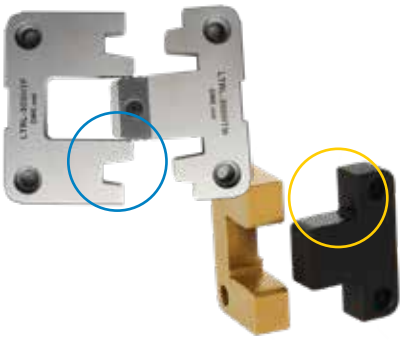

PRODUCT SPECIFICATIONS

DME LIFETIME LOCKS: PENTA-LOCK CONFIGURATION

3 INCH LOCKS

Penta-Lock Is Ideal For Molds With Increased Closing Force & Higher Injection Pressures To Ensure A Precision Lock Up At Final Close.

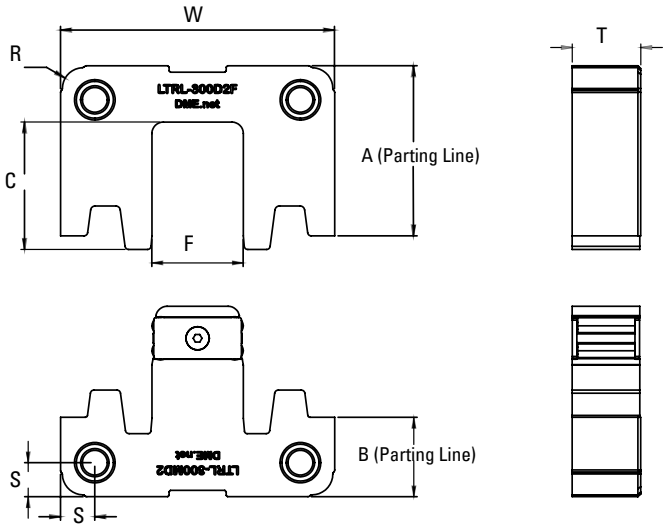

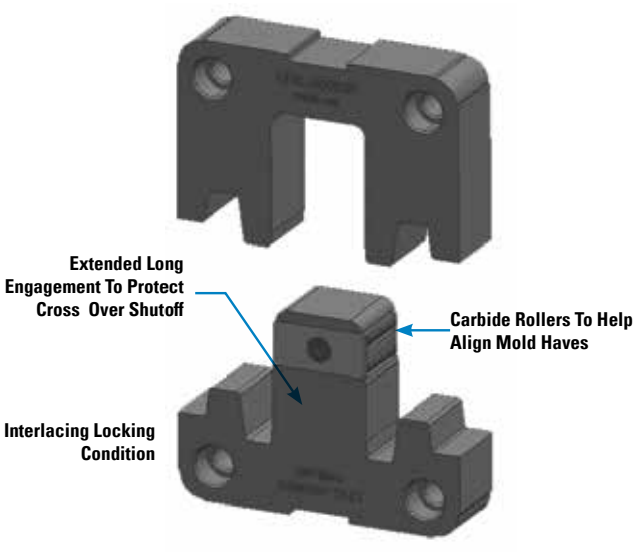

Item Number			STEEL TYPE	Dimensions given in inches.								SHCS SIZE
Standard Assembly (1 MALE, 1 FEMALE)	**Shuttle Assembly** (1 MALE, 2 FEMALE)	**FEMALE ONLY**		**W**	**A**	**B**	**C**	**F**	**T**	**R**	**S**	
LTRL-300D2	LTRL-300D2-SH	LTRL-300D2F	D2	3.00	1.875	0.875	1.405	1.000	0.750	0.240	0.375	1/4-20 x 7/8
LTRL-300HT	LTRL-300HT-SH	LTRL-300HTF	DC-53	3.00	1.875	0.875	1.405	1.000	0.750	0.240	0.375	1/4-20 x 7/8
LTRL-300SS	LTRL-300SS-SH	LTRL-300SSF	440C SS	3.00	1.875	0.875	1.405	1.000	0.750	0.240	0.375	1/4-20 x 7/8*

PRODUCT SPECIFICATIONS

DME LIFETIME LOCKS: TRIPLE LOCK CONFIGURATION

LOCK SIZE 1-2 INCHES

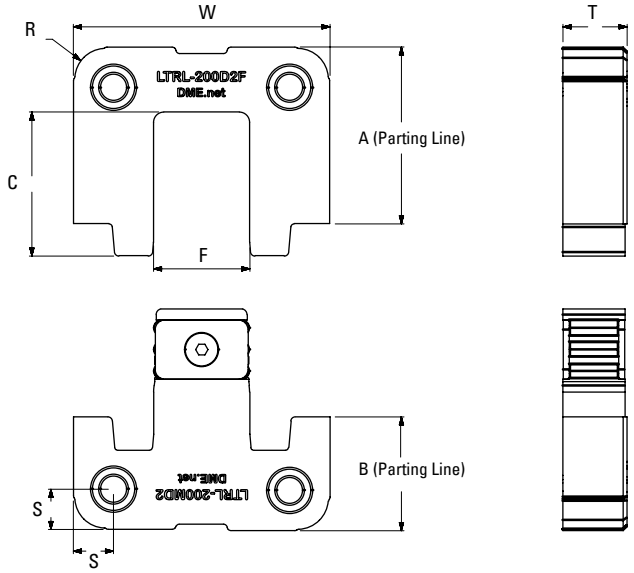

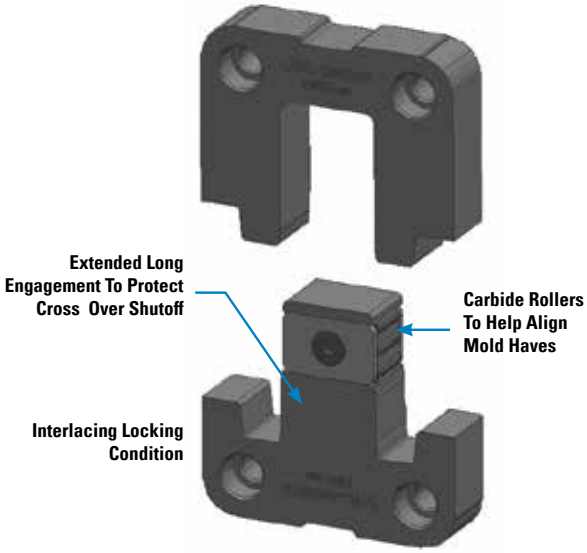

Item Number			STEEL TYPE	Dimensions given in inches.								SHCS SIZE
Standard Assembly (1 MALE, 1 FEMALE)	**Shuttle Assembly** (1 MALE, 2 FEMALE)	**FEMALE ONLY**		**W**	**A**	**B**	**C**	**F**	**T**	**R**	**S**	
LTRL-100D2	LTRL-100D2-SH	LTRL-100D2F	D2	1.00	1.125	0.875	0.735	0.400	0.375	0.177	0.250	10-32 x 1/2
LTRL-100HT	LTRL-100HT-SH	LTRL-100HTF	DC-53	1.00	1.125	0.875	0.735	0.400	0.375	0.177	0.250	10-32 x 1/2
LTRL-100SS	LTRL-100SS-SH	LTRL-100SSF	440C SS	1.00	1.125	0.875	0.735	0.400	0.375	0.177	0.250	10-32 x 1/2*
LTRL-150D2	LTRL-150D2-SH	LTRL-150D2F	D2	1.50	0.875	0.875	0.887	0.560	0.500	0.177	0.250	8-32 x 5/8
LTRL-150HT	LTRL-150HT-SH	LTRL-150HTF	DC-53	1.50	0.875	0.875	0.887	0.560	0.500	0.177	0.250	8-32 x 5/8
LTRL-150SS	LTRL-150SS-SH	LTRL-150SSF	440C SS	1.50	0.875	0.875	0.887	0.560	0.500	0.177	0.250	8-32 x 5/8*
LTRL-200D2	LTRL-200D2-SH	LTRL-200D2F	D2	2.00	1.375	0.875	1.120	0.750	0.500	0.240	0.313	10-32 x 5/8
LTRL-200HT	LTRL-200HT-SH	LTRL-200HTF	DC-53	2.00	1.375	0.875	1.120	0.750	0.500	0.240	0.313	10-32 x 5/8
LTRL-200SS	LTRL-200SS-SH	LTRL-200SSF	440C SS	2.00	1.375	0.875	1.120	0.750	0.500	0.240	0.313	10-32 x 5/8*

Locks are coated with Slide® Mold Shield Rust Preventive part number 42910P. Prior to installation wipe lock down with Slide Mold Cleaner 46910 to removal all saver. Apply Slide Super grease part number 43900 (included) to each carbide rollers to ensure high performance and long life. Super Grease Operating Temps: -45°F - +650°F/-42°C and is Ideal for mold assemblies used in the food and medical markets. Contains PTFE, no silicones.

* NOTE: SS series includes Stainless Steel SHCS

With tens of thousands of products to choose from, DME is your one-stop shop for everything molding. From complex undercuts solutions and plate control to standard pins, bushings and interlocks, the DME line of mold components will help you build or rebuild your mold base inside out, top to bottom. Industrial Supplies, Mold Bases, MUD Quick-Change, Control Systems, and Hot Runner solutions round out our extensive offering to truly be your one-stop shop.

DME Company LLC
42827 Irwin Dr.
Harrison Twp., MI 48045
800-626-6653 *toll-free tel*
248-398-6000 *tel*
www.DME.net *web*
DME@DME.net e-mail

DME Canada
41 Todd Road
Georgetown, ON Canada L7G 4R8
800-387-6600 *toll-free tel*
905-677-6370 *tel*
DME_Canada@DME.net e-mail

DME Mexico / South America
Circuito el Marques Notre, No.55
Parque Industrial El Marqués
El Marqués, Querétaro, CP 76246
52.442.670.2723/2710 *tel*
DME_MX@dme.net

eSTORE
store.dme.net
Shop online 24/7.

© DME 2026
Printed in U.S.A.

LLS-2.11.26