DME®

# Yoke Eyebolts & Hoist Rings

YOKE®

*Safety is our first priority*™

**SAFETY FIRST IS PRIORITY #1**

# HOIST RING (WITH ALLOY STEEL WASHER)

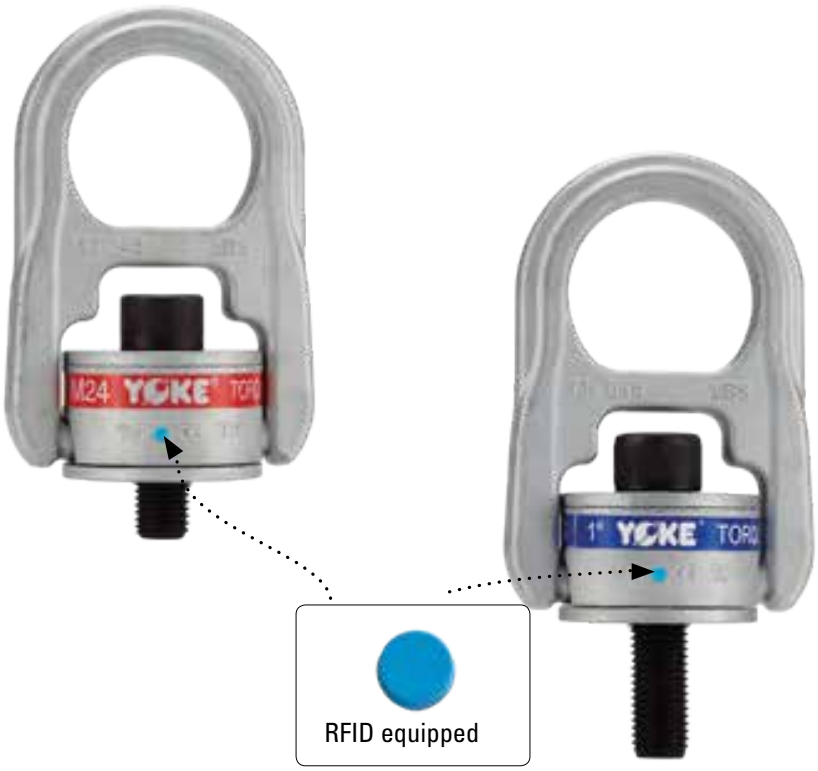


- Rotates through 360º and pivots 90º
- Manufactured from alloy steel, quenched and tempered
- Tested in accordance with EN1677-1
- Certified by DGUV GS-OA 15-04
- Load rated parts are 100% magnaflux cracked detected
- Individual forged parts and cap screw are traceable to Test Certification
- Bolt threads are metric
- Proof tested to 2.5 times the WLL (Working Load Limit)
- Fatigue rated to 20,000 cycles at 1.5 times the WLL
- All YOKE Lifting points meet or exceed all the requirements of ASME B30.26
- Quick and simple assembly, just a tapped hole is required

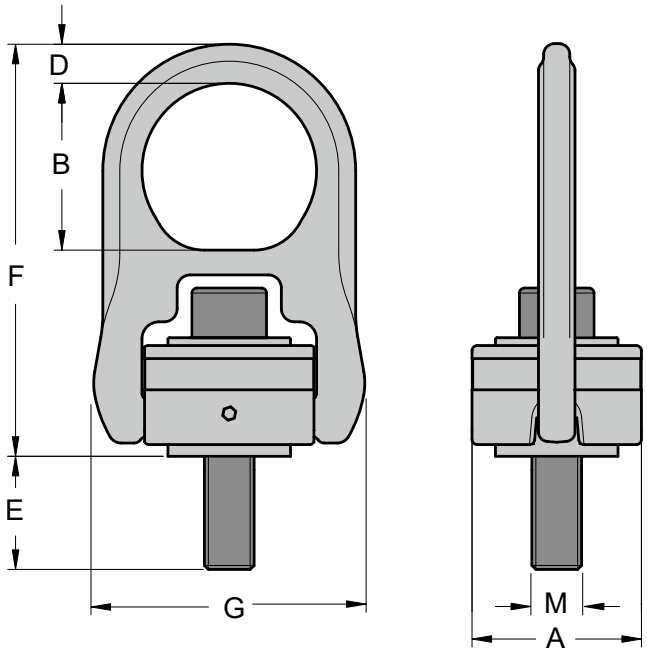

# HOIST RING (WITH ALLOY STEEL WASHER)

## Metric Thread (8203)

| ITEM NUMBER | WORKING LOAD LIMIT (tonnes) 5:1 | WORKING LOAD LIMIT (tonnes) 4:1 | M THREAD MM | A | B | D | E | F | G | TORQUE IN Nn | N.W kg |
|---|---|---|---|---|---|---|---|---|---|---|---|
| | | | | MM | | | | | | | |
| 8203004 | 0.40 | 0.50 | M8x1.25 | 40 | 41 | 9 | 17 | 102 | 65 | 10 | 0.4 |
| 8203005 | 0.45 | 0.55 | M10x1.5 | 40 | 41 | 9 | 11 | 102 | 65 | 16 | 0.5 |
| 8203005L | 0.45 | 0.55 | M10x1.5 | 40 | 41 | 9 | 26 | 102 | 65 | 16 | 0.5 |
| 8203010 | 1.05 | 1.30 | M12x1.75 | 65 | 58 | 15 | 15 | 158 | 105 | 38 | 1.7 |
| 8203010L | 1.05 | 1.30 | M12x1.75 | 65 | 58 | 15 | 30 | 158 | 105 | 38 | 1.7 |
| 8203019 | 1.90 | 2.40 | M16x2 | 65 | 58 | 15 | 20 | 158 | 105 | 81 | 1.8 |
| 8203019L | 1.90 | 2.40 | M16x2 | 65 | 58 | 15 | 35 | 158 | 105 | 81 | 1.8 |
| 8203021 | 2.15 | 2.70 | M20x2.5 | 65 | 58 | 15 | 25 | 158 | 105 | 136 | 1.8 |
| 8203021L | 2.15 | 2.70 | M20x2.5 | 65 | 58 | 15 | 45 | 158 | 105 | 136 | 1.9 |
| 8203030 | 3.00 | 3.75 | M20x2.5 | 85 | 73 | 22 | 25 | 204 | 134 | 136 | 4.0 |
| 8203030L | 3.00 | 3.75 | M20x2.5 | 85 | 73 | 22 | 45 | 204 | 134 | 136 | 5.2 |
| 8203042 | 4.20 | 5.25 | M24x3 | 85 | 73 | 22 | 26 | 204 | 134 | 312 | 4.2 |
| 8203042L | 4.20 | 5.25 | M24x3 | 85 | 73 | 22 | 56 | 204 | 134 | 312 | 4.3 |
| 8203070 | 7.00 | 8.75 | M30x3.5 | 100 | 80 | 25 | 81 | 218 | 160 | 637 | 6.6 |
| 8203110 | 11.00 | 13.75 | M36x4 | 120 | 106 | 36 | 76 | 308 | 220 | 1005 | 15.0 |
| 8203125 | 12.50 | 15.60 | M42x4.5 | 120 | 106 | 36 | 95 | 308 | 220 | 1005 | 16.0 |
| 8203135 | 13.50 | 16.90 | M48x5 | 120 | 106 | 36 | 105 | 308 | 220 | 1350 | 16.0 |
| 8203155 | 15.50 | 19.40 | M56x5.5 | 138 | 109 | 34 | 94 | 308 | 241 | 1350 | 19.1 |
| 8203223 | 22.30 | 27.90 | M64x6 | 138 | 95 | 38 | 98 | 312 | 241 | 2847 | 23.0 |

## UNC Thread (8204)

| ITEM NUMBER | WORKING LOAD LIMIT (LBS) | M THREAD INCH | A | B | D | E | F | G | TORQUE IN FT.LBS | N.W lbs |
|---|---|---|---|---|---|---|---|---|---|---|
| | | | INCH | | | | | | | |
| 8204004 | 800 | 5/16-18UNC | 1.57 | 1.61 | 0.35 | 0.71 | 4.02 | 2.56 | 7 | 0.9 |
| 8204005 | 1000 | 3/8-16UNC | 1.57 | 1.61 | 0.35 | 0.71 | 4.02 | 2.56 | 12 | 0.9 |
| 8204010 | 2500 | 1/2-13UNC | 2.56 | 2.32 | 0.59 | 0.75 | 6.26 | 4.13 | 28 | 3.7 |
| 8204010L | 2500 | 1/2-13UNC | 2.56 | 2.32 | 0.59 | 1.226 | 6.26 | 4.13 | 28 | 3.7 |
| 8204019 | 4000 | 5/8-11UNC | 2.56 | 2.32 | 0.59 | 0.74 | 6.26 | 4.13 | 60 | 4.0 |
| 8204019L | 4000 | 5/8-11UNC | 2.56 | 2.87 | 0.59 | 1.75 | 6.26 | 4.13 | 60 | 4.0 |
| 8204021 | 5000 | 3/4-10UNC | 2.56 | 2.87 | 0.59 | 1.24 | 6.26 | 4.13 | 100 | 4.0 |
| 8204021L | 5000 | 3/4-10UNC | 2.56 | 2.87 | 0.59 | 1.73 | 6.26 | 5.28 | 100 | 4.2 |
| 8204030 | 7000 | 3/4-10UNC | 3.35 | 2.87 | 0.59 | 0.87 | 8.03 | 5.28 | 100 | 8.8 |
| 8204030L | 7000 | 3/4-10UNC | 3.35 | 2.87 | 0.87 | 1.87 | 8.03 | 5.28 | 100 | 9.5 |
| 8204042 | 8000 | 7/8-9UNC | 3.35 | 2.87 | 0.87 | 1.43 | 8.03 | 5.28 | 160 | 9.3 |
| 8204042L | 8000 | 7/8-9UNC | 3.35 | 2.87 | 0.87 | 2.37 | 8.03 | 5.28 | 160 | 9.7 |
| 8204045 | 10000 | 1-8UNC | 3.35 | 2.87 | 0.87 | 1.36 | 8.03 | 5.28 | 230 | 9.5 |
| 8204045L | 10000 | 1-8UNC | 3.35 | 2.87 | 0.87 | 2.36 | 8.03 | 5.28 | 230 | 10.1 |
| 8204070 | 15000 | 1 1/4-7UNC | 3.95 | 3.15 | 1.00 | 2.25 | 8.58 | 6.30 | 470 | 14.5 |
| 8204125 | 24000 | 1 1/2-6UNC | 4.72 | 4.29 | 1.38 | 2.17 | 12.09 | 8.66 | 800 | 35.2 |
| 8204135 | 30000 | 2-4.5UNC | 4.72 | 4.29 | 1.38 | 3.01 | 12.09 | 8.66 | 1100 | 35.2 |

# LIFTING POINT

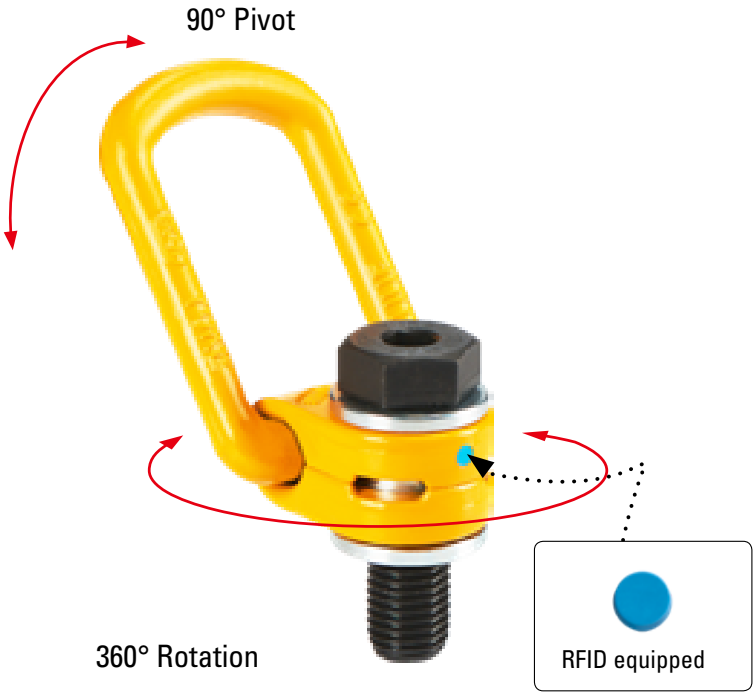


- Rotates through 360º and pivots 90º
- Manufactured from alloy steel, quenched and tempered
- Tested in accordance with EN1677-1
- Certified by DGUV GS-OA 15-04
- Load rated parts are 100% magnaflux cracked detected
- Individual forged parts and cap screw are traceable to Test Certification
- Bolt threads are metric
- Proof tested to 2.5 times the WLL (Working Load Limit)
- Fatigue rated to 20,000 cycles at 1.5 times the WLL
- All YOKE Lifting points meet or exceed all the requirements of ASME B30.26
- Quick and simple assembly, just a tapped hole is required

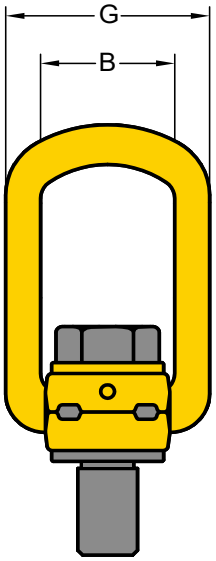


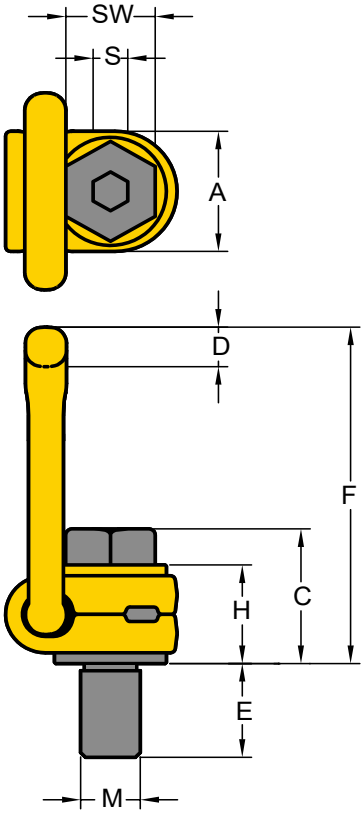

# LIFTING POINT

## Metric Thread (8211)

| ITEM NUMBER | WORKING LOAD LIMIT (tonnes) | M THREAD MM | A | B | C | D | E | F | G | H | S | SW | TORQUE IN Nn | N.W kg |
|---|---|---|---|---|---|---|---|---|---|---|---|---|---|---|
| | | | MM | | | | | | | | | | | |
| 8211003 | 0.3 | M8x1.25 | 30 | 35 | 35 | 10 | 11 | 85 | 55 | 29 | 6 | 13 | 30 | 0.2 |
| 8211006 | 0.63 | M10x1.5 | 30 | 35 | 36 | 10 | 16 | 85 | 55 | 29 | 6 | 17 | 60 | 0.3 |
| 8211010 | 1 | M12x1.75 | 33 | 37 | 44 | 14 | 18 | 98 | 57 | 36 | 8 | 19 | 100 | 0.5 |
| 8211012 | 1.2 | M14x2 | 33 | 37 | 45 | 14 | 21 | 98 | 57 | 36 | 10 | 22 | 120 | 0.5 |
| 8211015 | 1.5 | M16x2 | 33 | 37 | 46 | 14 | 24 | 98 | 57 | 36 | 10 | 24 | 150 | 0.5 |
| 8211020 | 2 | M18x2.5 | 50 | 54 | 57 | 17 | 26 | 140 | 82 | 44 | 12 | 30 | 200 | 1.3 |
| 8211025 | 2.5 | M20x2.5 | 50 | 54 | 57 | 17 | 30 | 140 | 82 | 44 | 12 | 30 | 250 | 1.3 |
| 8211040 | 4 | M24x3 | 50 | 54 | 59 | 17 | 36 | 140 | 82 | 44 | 14 | 36 | 400 | 1.4 |
| 8211042 | 4 | M27x3 | 60 | 65 | 79 | 23 | 38 | 170 | 99 | 62 | 17 | 41 | 400 | 2.8 |
| 8211050 | 5 | M30x3.5 | 60 | 65 | 81 | 23 | 48 | 170 | 99 | 62 | 17 | 46 | 500 | 3.1 |
| 8211070 | 7 | M36x4 | 60 | 65 | 88 | 23 | 54 | 178 | 99 | 65 | 22 | 55 | 700 | 3.3 |
| 8211080 | 8 | M36x4 | 77 | 85 | 101 | 27 | 62 | 225 | 124 | 78 | 22 | 55 | 800 | 5.8 |
| 8211100 | 10 | M42x4.5 | 77 | 85 | 104 | 27 | 72 | 225 | 124 | 78 | 24 | 65 | 1000 | 6.3 |
| 8211150 | 15 | M42x4.5 | 95 | 104 | 112 | 36 | 63 | 256 | 158 | 86 | 24 | 65 | 1500 | 10.8 |
| 8211200 | 20 | M48x5 | 95 | 104 | 120 | 36 | 72 | 259 | 158 | 90 | 27 | 75 | 2000 | 11.6 |

## UNC Thread (8212)

| ITEM NUMBER | WORKING LOAD LIMIT (tonnes) | M THREAD INCH | A | B | C | D | E | F | G | H | S | SW | TORQUE IN Nn | N.W lbs |
|---|---|---|---|---|---|---|---|---|---|---|---|---|---|---|
| | | | INCH | | | | | | | | | | | |
| 8212010 | 1 | 1/2-13UNC | 1.30 | 1.46 | 1.73 | 0.53 | 0.75 | 3.86 | 2.24 | 1.42 | 5/16 | 3/4 | 100 | 1.1 |
| 8212015 | 1.5 | 5/8-11UNC | 1.30 | 1.46 | 1.81 | 0.53 | 0.94 | 3.86 | 2.24 | 1.42 | 3/8 | 1 5/16 | 150 | 1.1 |
| 8212020 | 2.5 | 3/4-10UNC | 1.97 | 2.13 | 2.20 | 0.65 | 1.10 | 5.51 | 3.23 | 1.73 | 1/2 | 1 1/8 | 250 | 2.9 |
| 8212025 | 2.5 | 7/8-9UNC | 1.97 | 2.13 | 2.28 | 0.65 | 1.10 | 5.51 | 3.23 | 1.73 | 5/8 | 1 5/16 | 300 | 2.9 |
| 8212040 | 4 | 1-8UNC | 1.97 | 2.13 | 2.34 | 0.65 | 1.61 | 5.51 | 3.23 | 1.73 | 5/8 | 1 1/2 | 400 | 3.1 |
| 8212050 | 5 | 1 1/4-7UNC | 2.36 | 2.56 | 3.23 | 0.89 | 1.61 | 6.69 | 3.90 | 2.44 | 7/8 | 1 7/8 | 500 | 6.8 |
| 8212080 | 8 | 1 1/2-6UNC | 3.03 | 3.35 | 4.01 | 1.04 | 2.25 | 8.86 | 4.88 | 3.07 | 1 | 2 1/4 | 800 | 12.8 |
| 8212150 | 15 | 1 3/4-5UNC | 3.74 | 4.09 | 4.48 | 1.42 | 2.63 | 10.08 | 6.22 | 3.39 | 1 | 2 5/8 | 1500 | 24.0 |
| 8212200 | 20 | 2-4.5UNC | 3.74 | 4.09 | 4.76 | 1.42 | 3 | 10.20 | 6.22 | 3.54 | 1 1/4 | 3 | 2000 | 25.5 |

# ANCHOR POINT

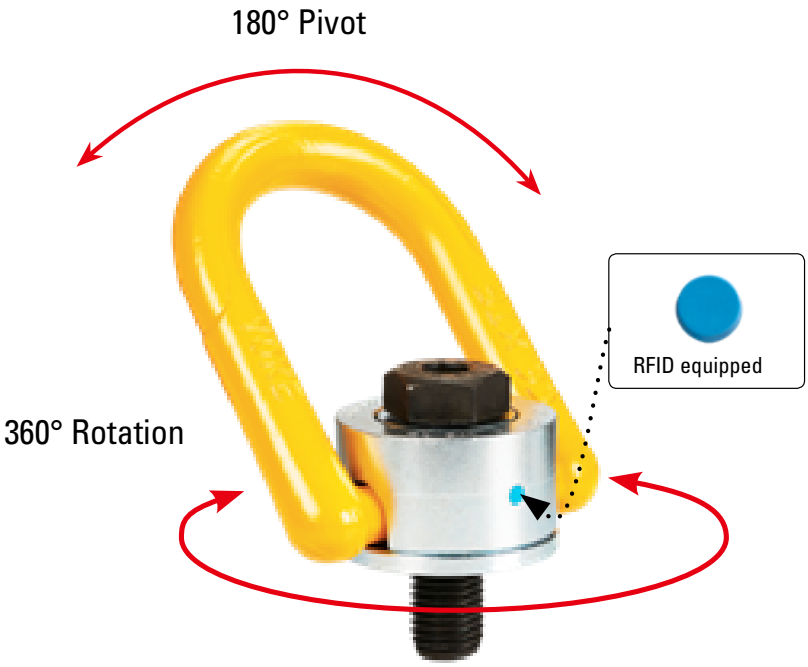


- Rotates through 360° and pivots 90°
- Manufactured from alloy steel, quenched and tempered
- Tested in accordance with EN1677-1
- Certified by DGUV GS-OA 15-04
- Load rated parts are 100% magnaflux cracked detected
- Individual forged parts and cap screw are traceable to Test Certification
- Bolt threads are metric
- Proof tested to 2.5 times the WLL
- Fatigue rated to 20,000 cycles at 1.5 times the WLL
- All YOKE Lifting points meet or exceed all the requirements of ASME B30.26
- Quick and simple assembly, just a tapped hole is required

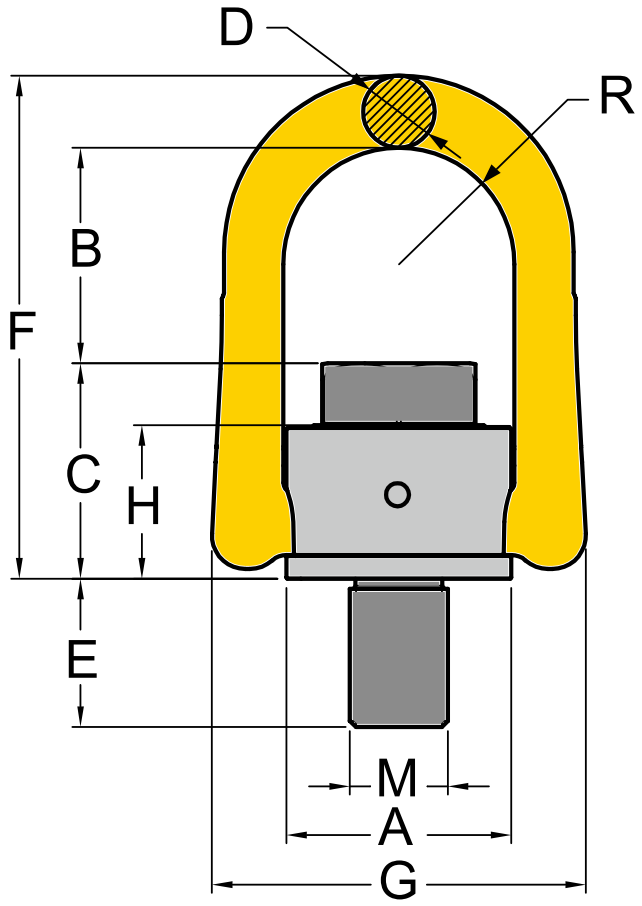


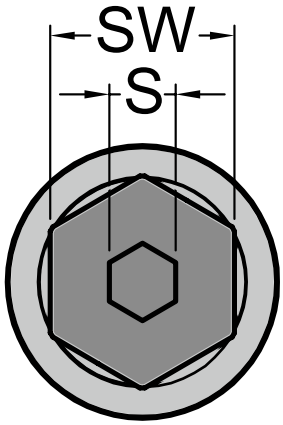

# ANCHOR POINT

## Metric Thread (8231)

| ITEM NUMBER | WORKING LOAD LIMIT (tonnes) | M THREAD MM | A | B | C | D | E | F | G | H | S | SW | TORQUE IN Nn | N.W kg |
|---|---|---|---|---|---|---|---|---|---|---|---|---|---|---|
| | | | MM | | | | | | | | | | | |
| 8231005 | 0.5 | M8x1.25 | 33 | 42 | 28 | 11 | 12 | 80 | 58 | 23 | 6 | 13 | 30 | 0.3 |
| 8231007 | 0.7 | M10x1.5 | 33 | 41 | 29 | 11 | 15 | 80 | 58 | 23 | 6 | 17 | 60 | 0.3 |
| 8231010 | 1.0 | M12x1.75 | 33 | 40 | 31 | 11 | 20 | 80 | 58 | 23 | 8 | 19 | 100 | 0.3 |
| 8231015 | 1.5 | M14x2 | 50 | 56 | 45 | 17 | 21 | 117 | 90 | 36 | 10 | 22 | 120 | 0.9 |
| 8231020 | 2.0 | M16x2 | 50 | 54 | 46 | 17 | 24 | 117 | 90 | 36 | 10 | 24 | 150 | 0.9 |
| 8231025 | 2.5 | M18x2.5 | 65 | 78 | 57 | 20 | 26 | 153 | 108 | 44 | 12 | 30 | 200 | 1.9 |
| 8231030 | 3.0 | M20x2.5 | 50 | 52 | 49 | 17 | 30 | 117 | 90 | 36 | 12 | 30 | 250 | 1.0 |
| 8231050 | 5.0 | M24x3 | 72 | 81 | 59 | 25 | 36 | 163 | 125 | 44 | 14 | 36 | 400 | 2.6 |
| 8231056 | 5.6 | M27x3 | 87 | 86 | 79 | 30 | 38 | 204 | 148 | 62 | 17 | 41 | 400 | 4.9 |
| 8231078 | 7.8 | M30x3.5 | 87 | 94 | 81 | 30 | 48 | 204 | 148 | 62 | 17 | 46 | 500 | 5.0 |
| 8231125 | 12.5 | M36x4 | 110 | 112 | 98 | 36 | 54 | 247 | 188 | 75 | 22 | 55 | 1000 | 9.6 |
| 8231156 | 15.6 | M42x4.5 | 110 | 101 | 108 | 36 | 63 | 247 | 188 | 83 | 24 | 65 | 1500 | 10.9 |
| 8231200 | 20.0 | M48x5 | 110 | 97 | 113 | 36 | 72 | 248 | 188 | 83 | 27 | 75 | 2000 | 11.6 |
| 8231220 | 22.0 | M56x5.5 | 123 | 116 | 121 | 36 | 84 | 274 | 202 | 91 | 27 | 85 | 2100 | 15.0 |
| 8231225 | 22.5 | M64x6 | 123 | 111 | 126 | 36 | 100 | 274 | 202 | 91 | 32 | 95 | 2200 | 16.3 |

## UNC Thread (8232)

| ITEM NUMBER | WORKING LOAD LIMIT (tonnes) | M THREAD INCH | A | B | C | D | E | F | G | H | R | S | SW | TORQUE IN Nn | N.W lbs |
|---|---|---|---|---|---|---|---|---|---|---|---|---|---|---|---|
| | | | INCH | | | | | | | | | | | | |
| 8232010 | 0.8 | 1/2-13UNC | 1.30 | 1.57 | 1.20 | 0.41 | 0.81 | 3.17 | 2.28 | 0.90 | 0.67 | 5/16 | 3/4 | 100 | 1.8 |
| 8232020 | 1.6 | 5/8-11UNC | 1.97 | 2.13 | 1.81 | 0.65 | 1.13 | 4.61 | 3.54 | 1.42 | 1.06 | 3/8 | 15/16 | 150 | 2.0 |
| 8232030 | 2.4 | 3/4-10UNC | 1.97 | 2.07 | 1.89 | 0.65 | 1.54 | 4.61 | 3.54 | 1.42 | 1.06 | 1/2 | 1 1/8 | 250 | 2.2 |
| 8232038 | 3.0 | 7/8-9UNC | 2.56 | 2.99 | 2.28 | 0.79 | 1.42 | 6.02 | 4.25 | 1.73 | 1.34 | 5/8 | 15/16 | 300 | 4.3 |
| 8232050 | 4.5 | 1-8UNC | 2.81 | 3.17 | 2.34 | 0.98 | 1.61 | 6.38 | 4.92 | 1.73 | 1.46 | 5/8 | 1 1/2 | 400 | 5.7 |
| 8232078 | 6.25 | 1 1/4-7UNC | 3.43 | 3.66 | 2.23 | 1.18 | 2.09 | 8.07 | 5.83 | 2.44 | 1.79 | 7/8 | 1 7/8 | 500 | 11.0 |
| 8232125 | 10.0 | 1 1/2-6UNC | 4.29 | 4.38 | 3.87 | 1.42 | 2.40 | 9.92 | 7.40 | 3.07 | 2.22 | 1 | 2 1/4 | 800 | 21.2 |
| 8232200 | 16 | 2-4.5UNC | 4.61 | 3.80 | 4.46 | 1.42 | 3 | 9.93 | 7.71 | 3.35 | 2.38 | 1 1/4 | 3 | 2000 | 25.6 |

# SUPER POINT

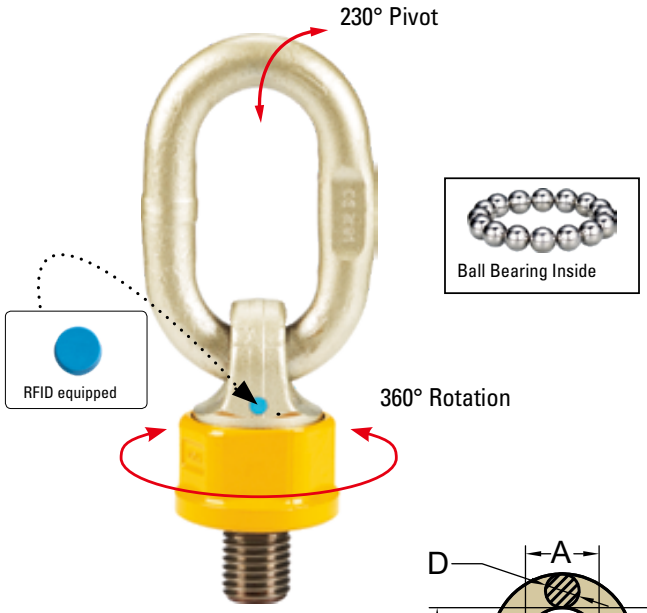


- Rotates through 360º and pivots 90º
- Manufactured from alloy steel, quenched and tempered
- Tested in accordance with EN1677-1
- Certified by DGUV GS-OA 15-04
- Load rated parts are 100% magnaflux cracked detected
- Individual forged parts and cap screw are traceable to Test Certification
- Bolt threads are metric
- Proof tested to 2.5 times the WLL
- Fatigue rated to 20,000 cycles at 1.5 times the WLL
- All YOKE Lifting points meet or exceed all the requirements of ASME B30.26
- Quick and simple assembly, just a tapped hole is required

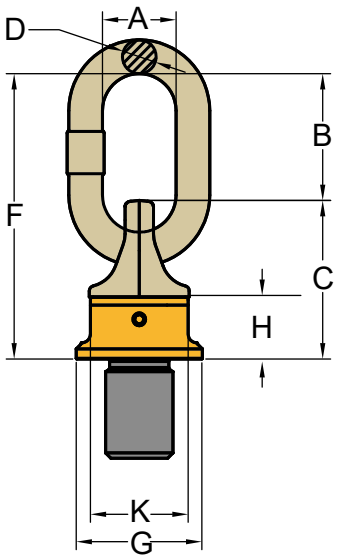


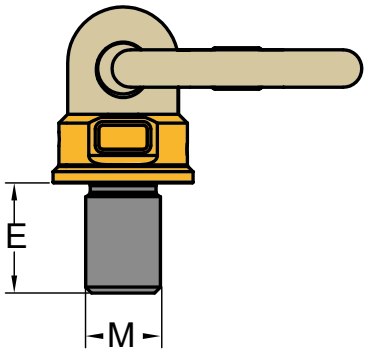


## UNC Thread (8252)

| ITEM NUMBER | WORKING LOAD LIMIT (tonnes) | M THREAD INCH | G | C | K | H | E | F | D | B | A | TORQUE IN Nn | N.W lbs |
|---|---|---|---|---|---|---|---|---|---|---|---|---|---|
| | | | INCH | | | | | | | | | | |
| 825200701 | 0.5 | 3/8-16UNC | 1.44 | 1.89 | 1.34 | 0.81 | 0.56 | 3.98 | .051 | 2.09 | 1.38 | 10-40 | 1 |
| 825200702 | 0.7 | 1/2-13UNC | 1.44 | 1.89 | 1.34 | 0.81 | 0.76 | 3.98 | .051 | 2.09 | 1.38 | 15-40 | 1 |
| 825201402 | 1.4 | 5/8-11UNC | 1.44 | 1.89 | 1.34 | 0.81 | 0.94 | 3.98 | 0.51 | 2.09 | 1.38 | 45-130 | 1 |
| 825202501 | 2.5 | 3/4-10UNC | 2.05 | 2.68 | 1.81 | 1.1 | 1.13 | 5 | 0.63 | 2.32 | 1.38 | 100-170 | 2.1 |
| 825204002 | 4 | 1-8UNC | 2.24 | 2.95 | 1.97 | 1.36 | 1.5 | 5.83 | 0.75 | 2.87 | 1.57 | 190-280 | 3.3 |
| 825206702 | 6.7 | 1 1/4-7UNC | 2.76 | 3.74 | 2.56 | 1.61 | 1.88 | 6.42 | 0.75 | 2.68 | 1.57 | 230-400 | 5.3 |
| 825208002 | 8 | 1 1/4-7UNC | 3.19 | 4.17 | 2.95 | 1.89 | 1.88 | 7.91 | 0.87 | 3.74 | 1.97 | 270-600 | 8.1 |
| 825210002 | 10 | 1 1/2-6UNC | 3.19 | 4.17 | 2.95 | 1.89 | 2.25 | 7.91 | 0.87 | 3.74 | 1.97 | 270-600 | 8.3 |
| 825212503 | 12.5 | 1 3/4-5UNC | 3.19 | 4.17 | 2.95 | 1.89 | 2.63 | 7.91 | 0.87 | 3.74 | 1.97 | 270-700 | 8.8 |
| 825212505 | 12.5 | 2-4.5UNC | 3.19 | 4.17 | 2.95 | 1.89 | 3 | 7.91 | 0.87 | 3.74 | 1.97 | 270-700 | 9.7 |
| 825217004 | 17 | 2-4.5UNC | 4.09 | 5 | 3.74 | 2.28 | 3 | 10.08 | 1.26 | 5.08 | 2.76 | 350-800 | 16.7 |
| 825217006 | 18 | 2 1/4-4.5UNC | 4.09 | 5 | 3.74 | 2.28 | 3.38 | 10.08 | 1.26 | 5.08 | 2.76 | 350-900 | 17.8 |
| 825220001 | 20 | 2 1/2-2UNC | 4.09 | 5 | 3.74 | 2.28 | 3.75 | 10.08 | 1.26 | 5.08 | 2.76 | 350-900 | 19.6 |
| 825228001 | 28 | 2 1/2-4UNC | 5.08 | 6.85 | 4.53 | 3.07 | 3.75 | 12.01 | 1.42 | 5.16 | 3.15 | 500-1000 | 36.1 |
| 825235001 | 35 | 3 1/2-4UNC | 5.83 | 7.36 | 5.31 | 3.35 | 3.75 | 14.41 | 1.77 | 7.05 | 3.94 | 500-1400 | 55.7 |

# SUPER POINT

## Metric Thread (8251)

| ITEM NUMBER | WORKING LOAD LIMIT (tonnes) | M THREAD MM | G | C | K | H | E | F | D | B | A | TORQUE IN Nn | N.W kg |
|---|---|---|---|---|---|---|---|---|---|---|---|---|---|
| | | | MM | | | | | | | | | | |
| 825100701 | 0.5 | M10x1.5 | 36.5 | 48 | 34 | 20.5 | 18 | 101 | 13 | 53 | 35 | 10-40 | 0.4 |
| 825100702 | 0.7 | M12x1.75 | 36.5 | 48 | 34 | 20.5 | 18 | 101 | 13 | 53 | 35 | 15-40 | 0.4 |
| 825100703 | 0.7 | M12x1.75 | 36.5 | 48 | 34 | 20.5 | 25 | 101 | 13 | 53 | 35 | 15-40 | 0.4 |
| 825100704 | 1 | M14x2 | 36.5 | 48 | 34 | 20.5 | 20 | 101 | 13 | 53 | 35 | 30-40 | 0.4 |
| 825101401 | 1.4 | M16x2 | 36.5 | 48 | 34 | 20.5 | 20 | 101 | 13 | 53 | 35 | 45-130 | 0.44 |
| 825101402 | 1.4 | M16x2 | 36.5 | 48 | 34 | 20.5 | 24 | 101 | 13 | 53 | 35 | 45-130 | 0.5 |
| 825101403 | 1.4 | M16x2 | 36.5 | 48 | 34 | 20.5 | 30 | 101 | 13 | 53 | 35 | 75-130 | 0.5 |
| 825101404 | 1.7 | M20x2.5 | 36.5 | 48 | 34 | 20.5 | 30 | 101 | 13 | 53 | 35 | 90-130 | 0.5 |
| 825101405 | 1.7 | M24x3 | 36.5 | 48 | 34 | 20.5 | 30 | 101 | 13 | 53 | 35 | 100-170 | 0.5 |
| 825102501 | 2.5 | M20x2.5 | 52 | 68 | 46 | 28 | 30 | 127 | 16 | 59 | 35 | 100-170 | 1 |
| 825102502 | 2.5 | M20x2.5 | 52 | 68 | 46 | 28 | 40 | 127 | 16 | 59 | 35 | 100-170 | 1 |
| 825102503 | 2.5 | M20x2.5 | 52 | 68 | 46 | 28 | 50 | 127 | 16 | 59 | 35 | 100-170 | 1.1 |
| 825102504 | 2.5 | M20x2.5 | 52 | 68 | 46 | 28 | 70 | 127 | 16 | 59 | 35 | 190-280 | 1.1 |
| 825104001 | 4 | M24x3 | 57 | 75 | 50 | 34.5 | 30 | 148 | 19 | 73 | 40 | 190-280 | 1.5 |
| 825104002 | 4 | M24x3 | 57 | 75 | 50 | 34.5 | 36 | 148 | 19 | 73 | 40 | 190-280 | 1.5 |
| 825104003 | 4 | M24x3 | 57 | 75 | 50 | 34.5 | 45 | 148 | 19 | 73 | 40 | 190-280 | 1.5 |
| 825104004 | 4 | M24x3 | 57 | 75 | 50 | 34.5 | 50 | 148 | 19 | 73 | 40 | 190-280 | 1.5 |
| 825104005 | 4 | M30x3.5 | 57 | 75 | 50 | 34.5 | 35 | 148 | 19 | 73 | 40 | 190-280 | 1.5 |
| 825106701 | 6.7 | M30x3.5 | 70 | 95 | 65 | 41 | 35 | 163 | 19 | 68 | 40 | 230-400 | 2.4 |
| 825106702 | 6.7 | M30x3.5 | 70 | 95 | 65 | 41 | 45 | 163 | 19 | 68 | 40 | 230-400 | 2.4 |
| 825106703 | 6.7 | M30x3.5 | 70 | 95 | 65 | 41 | 50 | 163 | 19 | 68 | 40 | 230-400 | 2.5 |
| 825106704 | 6.7 | M30x3.5 | 70 | 95 | 65 | 41 | 60 | 163 | 19 | 68 | 40 | 230-400 | 2.5 |
| 825108001 | 8 | M30x3.5 | 81 | 106 | 75 | 48 | 35 | 201 | 22 | 95 | 50 | 270-600 | 3.6 |
| 825108002 | 8 | M30x3.5 | 81 | 106 | 75 | 48 | 45 | 201 | 22 | 95 | 50 | 270-600 | 3.7 |
| 825110001 | 10 | M36x4 | 81 | 106 | 75 | 48 | 50 | 201 | 22 | 95 | 50 | 270-600 | 3.8 |
| 825110002 | 10 | M36x4 | 81 | 106 | 75 | 48 | 54 | 201 | 22 | 95 | 50 | 270-700 | 3.9 |
| 825112501 | 12.5 | M42x4.5 | 81 | 106 | 75 | 48 | 50 | 201 | 22 | 95 | 50 | 270-700 | 3.9 |
| 825112502 | 12.5 | M42x4.5 | 81 | 106 | 75 | 48 | 60 | 201 | 22 | 95 | 50 | 270-700 | 4 |
| 825112503 | 12.5 | M42x4.5 | 81 | 106 | 75 | 48 | 63 | 201 | 22 | 95 | 50 | 270-700 | 4 |
| 825112504 | 12.5 | M45x4.5 | 104 | 106 | 75 | 48 | 60 | 201 | 22 | 95 | 50 | 270-700 | 4.1 |
| 825112505 | 12.5 | M48x5 | 104 | 106 | 75 | 48 | 72 | 201 | 22 | 95 | 50 | 270-700 | 4.4 |
| 825117001 | 13 | M42x4.5 | 104 | 127 | 95 | 58 | 60 | 256 | 32 | 129 | 70 | 350-800 | 7.4 |
| 825117002 | 17 | M45x4.5 | 104 | 127 | 95 | 58 | 60 | 256 | 32 | 129 | 70 | 350-800 | 7.5 |
| 825117003 | 17 | M48x5 | 104 | 127 | 95 | 58 | 60 | 256 | 32 | 129 | 70 | 350-800 | 7.6 |
| 825117004 | 17 | M48x5 | 104 | 127 | 95 | 58 | 72 | 256 | 32 | 129 | 70 | 350-800 | 7.7 |
| 825117005 | 18 | M56x5.5 | 104 | 127 | 95 | 58 | 78 | 256 | 32 | 129 | 70 | 350-900 | 8.1 |
| 825117006 | 18 | M56x5.5 | 104 | 127 | 95 | 58 | 84 | 256 | 32 | 129 | 70 | 350-900 | 8.1 |
| 825120001 | 20 | M64x6 | 104 | 127 | 95 | 58 | 96 | 256 | 32 | 129 | 70 | 350-900 | 8.9 |
| 825120002 | 20 | M64x6 | 104 | 127 | 95 | 58 | 110 | 256 | 32 | 129 | 70 | 350-900 | 9.3 |
| 825128002 | 28 | M72x6 | 129 | 174 | 115 | 78 | 120 | 305 | 36 | 131 | 80 | 500-1200 | 17.7 |
| 825128003 | 28 | M80x6 | 129 | 174 | 115 | 78 | 150 | 305 | 36 | 131 | 80 | 500-1200 | 19.6 |
| 825135001 | 35 | M80x6 | 148 | 187 | 135 | 85 | 120 | 366 | 45 | 179 | 100 | 500-1400 | 25.3 |
| 825135002 | 35 | M90x6 | 148 | 187 | 135 | 85 | 150 | 366 | 45 | 179 | 100 | 500-1500 | 27.8 |
| 825140001 | 40 | M80x6 | 170 | 210 | 145 | 83 | 120 | 340 | 45 | 130 | 90 | 500-1500 | 31.9 |
| 825140002 | 40 | M90x6 | 170 | 210 | 145 | 83 | 115 | 340 | 45 | 130 | 90 | 500-1500 | 33.6 |
| 825140003 | 40 | M90x6 | 170 | 210 | 145 | 83 | 150 | 340 | 45 | 130 | 90 | 500-1500 | 34.2 |
| 825140004 | 40 | M100x6 | 170 | 210 | 145 | 83 | 150 | 340 | 45 | 130 | 90 | 500-1700 | 35.2 |

# KEY EYE POINT

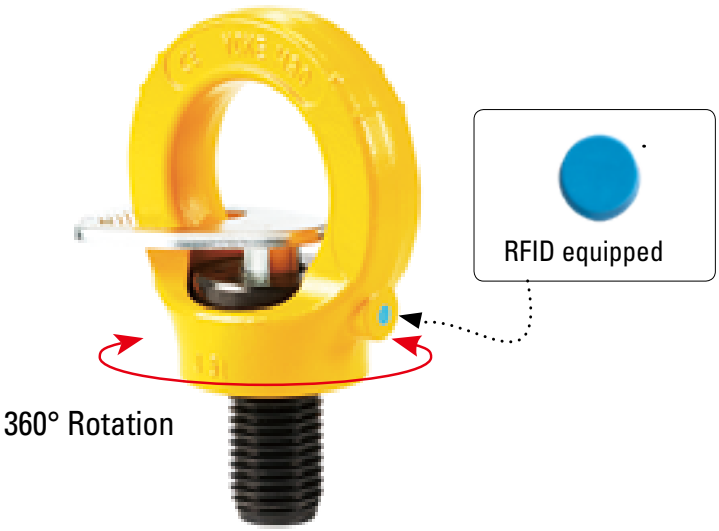


- Rotates through 360º and pivots 90º
- Manufactured from alloy steel, quenched and tempered
- Tested in accordance with EN1677-1
- Certified by DGUV GS-OA 15-04
- Load rated parts are 100% magnaflux cracked detected
- Individual forged parts and cap screw are traceable to Test Certification
- Bolt threads are metric
- Proof tested to 2.5 times the WLL
- Fatigue rated to 20,000 cycles at 1.5 times the WLL
- All YOKE Lifting points meet or exceed all the requirements of ASME B30.26
- Quick and simple assembly, just a tapped hole is required

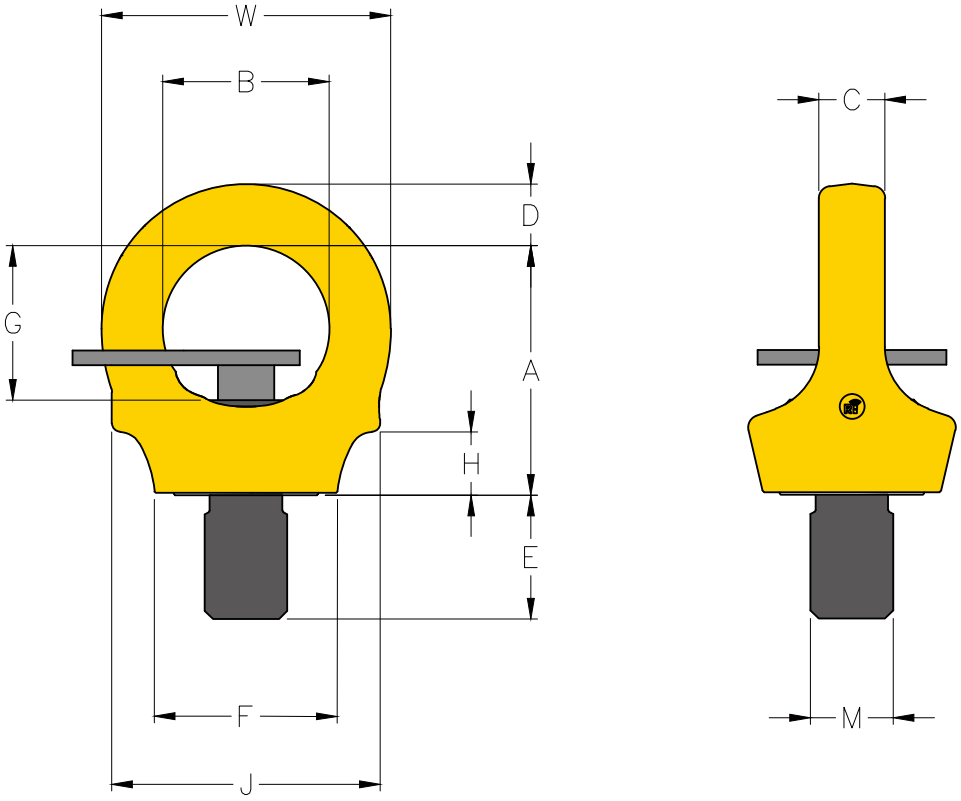


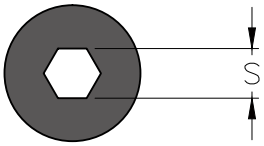

# KEY EYE POINT

## Metric Thread (8291K)

| ITEM NUMBER | WORKING LOAD LIMIT (tonnes) | M THREAD MM | A | B | C | D | E | F | G | H | J | S | W | TORQUE IN Nn | N.W kg |
|---|---|---|---|---|---|---|---|---|---|---|---|---|---|---|---|
| | | | MM | | | | | | | | | | | | |
| 8291K003 | 0.3 | M8x1.25 | 38 | 25 | 9 | 9 | 12 | 25 | 24 | 6 | 41 | 6 | 44 | 10 | 0.1 |
| 8291K004 | 0.4 | M10x1.5 | 38 | 25 | 9 | 9 | 15 | 25 | 24 | 6 | 41 | 6 | 44 | 10 | 0.1 |
| 8291K007 | 0.75 | M12x1.75 | 45 | 30 | 10 | 11 | 18 | 33 | 30 | 9 | 47 | 8 | 52 | 10 | 0.2 |
| 8291K015 | 1.5 | M16x2 | 52 | 35 | 14 | 13 | 24 | 25 | 34 | 11 | 56 | 10 | 61 | 30 | 0.4 |
| 8291K023 | 2.3 | M20x2.5 | 60 | 40 | 16 | 15 | 30 | 44 | 37 | 15 | 65 | 12 | 70 | 70 | 0.6 |
| 8291K032 | 3.2 | M24x3 | 72 | 49 | 19 | 18 | 36 | 53 | 47 | 19 | 78 | 14 | 84 | 150 | 1.1 |
| 8291K045 | 4.5 | M30x3.5 | 91 | 61 | 24 | 22 | 45 | 62 | 59 | 23 | 95 | 17 | 105 | 350 | 2.1 |
| 8291K070 | 7.0 | M36x4 | 110 | 73 | 29 | 27 | 54 | 76 | 72 | 31 | 114 | 22 | 126 | 410 | 3.7 |
| 8291K090 | 9.0 | M42x4.5 | 128 | 83 | 34 | 32 | 63 | 89 | 81 | 38 | 132 | 24 | 147 | 550 | 5.8 |
| 8291K120 | 12.0 | M48x5 | 145 | 95 | 38 | 37 | 72 | 105 | 94 | 44 | 150 | 27 | 168 | 550 | 8.6 |
| 8291K140 | 16.0 | M56x5.5 | 148 | 102 | 40 | 43 | 84 | 124 | 92 | 49 | 166 | 27 | 178 | 800 | 11.0 |
| 8291K150 | 18.0 | M64x6 | 148 | 102 | 40 | 43 | 96 | 124 | 92 | 49 | 166 | 27 | 178 | 800 | 11.8 |

## UNC Thread (8292K)

| ITEM NUMBER | WORKING LOAD LIMIT (tonnes) | M THREAD INCH | A | B | C | D | E | F | G | H | J | S | W | TORQUE IN Nn | N.W lbs |
|---|---|---|---|---|---|---|---|---|---|---|---|---|---|---|---|
| | | | INCH | | | | | | | | | | | | |
| 8292K003 | 0.3 | 5/16-18UNC | 1.49 | 1.00 | 0.33 | 0.37 | 0.47 | 0.99 | 0.92 | 0.24 | 1.60 | 0.25 | 1.73 | 10 | 0.3 |
| 8292K004 | 0.4 | 3/8-16UNC | 1.49 | 1.00 | 0.33 | 0.37 | 0.55 | 0.99 | 0.92 | 0.24 | 1.60 | 0.25 | 1.73 | 10 | 0.3 |
| 8292K007 | 0.75 | 1/2-13UNC | 1.79 | 1.19 | 0.39 | 0.43 | 0.75 | 1.30 | 1.16 | 0.37 | 1.85 | 0.31 | 2.05 | 10 | 0.5 |
| 8292K015 | 1.5 | 5/8-11UNC | 2.06 | 1.39 | 0.55 | 0.51 | 0.94 | 1.38 | 1.32 | 0.45 | 2.20 | 0.37 | 2.40 | 30 | 0.9 |
| 8292K023 | 2.3 | 3/4-10UNC | 2.38 | 1.59 | 0.63 | 0.58 | 1.14 | 1.74 | 1.47 | 0.60 | 2.56 | 0.5 | 2.76 | 70 | 1.4 |
| 8292K025 | 2.3 | 7/8-9UNC | 2.38 | 1.59 | 0.63 | 0.58 | 1.30 | 1.74 | 1.47 | 0.60 | 2.56 | 0.5 | 2.76 | 150 | 1.5 |
| 8292K032 | 3.2 | 1-8UNC | 2.85 | 1.91 | 0.75 | 0.70 | 1.52 | 2.08 | 1.79 | 0.75 | 3.07 | 0.56 | 3.31 | 150 | 2.5 |
| 8292K045 | 4.5 | 1 1/4-7UNC | 3.57 | 2.38 | 0.94 | 0.88 | 1.89 | 2.43 | 2.23 | 0.91 | 3.75 | 0.63 | 4.13 | 350 | 4.7 |
| 8292K070 | 7 | 1 1/2-6UNC | 4.32 | 2.85 | 1.14 | 1.05 | 2.24 | 2.99 | 2.71 | 1.20 | 4.49 | 0.87 | 4.96 | 410 | 8.7 |
| 8292K090 | 9 | 1 3/4-5UNC | 5.02 | 3.26 | 1.34 | 1.26 | 2.64 | 3.51 | 3.09 | 1.50 | 5.20 | 1.00 | 5.79 | 550 | 12.7 |
| 8292K120 | 12 | 2-4.5UNC | 5.70 | 3.74 | 1.50 | 1.44 | 3.03 | 4.12 | 3.69 | 1.75 | 5.91 | 1.00 | 6.61 | 550 | 19.6 |

# LIFT SUGGESTIONS

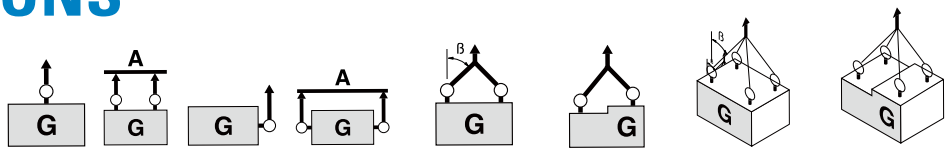


## HOIST RING (WITH ALLOY STEEL WASHER)

| | Number of Legs | | 1 | 2 | 1 | 2 | 2 | 2 | 2 | 3-4 | 3-4 | 3-4 |
|---|---|---|---|---|---|---|---|---|---|---|---|---|
| | Load Direction | | 0° | 0° | 90° | 90° | 0-45° | 45°-60° | unsymm | 0-45° | 45°-60° | unsymm |
| | Item Number | Thread | | WLL (t) | | | | | | | | |
| Metric Thread (8211) | 8203004 | M8 | 0.5 | 1 | 0.5 | 1 | 0.7 | 0.5 | 0.5 | 1.05 | 0.75 | 0.5 |
| | 8203005 | M10 | 0.55 | 1.1 | 0.55 | 1.1 | 0.77 | 0.55 | 0.55 | 1.16 | 0.83 | 0.55 |
| | 8203005L | M10 | 0.55 | 1.1 | 0.55 | 1.1 | 0.77 | 0.55 | 0.55 | 1.16 | 0.83 | 0.55 |
| | 8203010 | M12 | 1.3 | 2.6 | 1.3 | 2.6 | 1.82 | 1.3 | 1.3 | 2.73 | 1.95 | 1.3 |
| | 8203010L | M12 | 1.3 | 2.6 | 1.3 | 2.6 | 1.82 | 1.3 | 1.3 | 2.73 | 1.95 | 1.3 |
| | 8203019 | M16 | 2.4 | 4.8 | 2.4 | 4.8 | 3.36 | 2.4 | 2.4 | 5.04 | 3.6 | 2.4 |
| | 8203019L | M16 | 2.4 | 4.8 | 2.4 | 4.8 | 3.36 | 2.4 | 2.4 | 5.04 | 3.6 | 2.4 |
| | 8203021 | M20 | 2.7 | 5.4 | 2.7 | 5.4 | 3.78 | 2.7 | 2.7 | 5.67 | 4.05 | 2.7 |
| | 8203021L | M20 | 2.7 | 5.4 | 2.7 | 5.4 | 3.78 | 2.7 | 2.7 | 5.67 | 4.05 | 2.7 |
| | 8203030 | M20 | 3.75 | 7.5 | 3.75 | 7.5 | 5.25 | 3.75 | 3.75 | 7.88 | 5.63 | 3.75 |
| | 8203030L | M20 | 3.75 | 7.5 | 3.75 | 7.5 | 5.25 | 3.75 | 3.75 | 7.88 | 5.63 | 3.75 |
| | 8203042 | M24 | 5.25 | 10.5 | 5.25 | 10.5 | 7.35 | 5.25 | 5.25 | 11.03 | 7.88 | 5.25 |
| | 8203042L | M24 | 5.25 | 10.5 | 5.25 | 10.5 | 7.35 | 5.25 | 5.25 | 11.03 | 7.88 | 5.25 |
| | 8203070 | M30 | 8.75 | 17.5 | 8.75 | 17.5 | 12.25 | 8.75 | 8.75 | 18.38 | 13.13 | 8.75 |
| | 8203110 | M36 | 13.75 | 27.5 | 13.75 | 27.5 | 19.25 | 13.75 | 13.75 | 28.88 | 20.63 | 13.75 |
| | 8203125 | M42 | 15.6 | 31.2 | 15.6 | 31.2 | 21.84 | 15.6 | 15.6 | 32.76 | 23.4 | 15.6 |
| | 8203135 | M48 | 16.9 | 33.8 | 16.9 | 33.8 | 23.66 | 16.9 | 16.9 | 35.49 | 25.35 | 16.9 |
| | 8203155 | M56 | 19.4 | 38.8 | 19.4 | 38.8 | 27.16 | 19.4 | 19.4 | 40.74 | 29.1 | 19.4 |
| | 8203223 | M64 | 27.9 | 55.8 | 27.9 | 55.8 | 39.06 | 27.9 | 27.9 | 59.59 | 41.85 | 27.9 |
| UNC Thread (8212) | 8204004 | 5/16 | 0.36 | 0.72 | 0.36 | 0.72 | 0.5 | 0.36 | 0.36 | 0.76 | 0.54 | 0.36 |
| | 8204005 | 3/8 | 0.45 | 0.9 | 0.45 | 0.9 | 0.63 | 0.45 | 0.45 | 0.95 | 0.68 | 0.45 |
| | 8204010 | 1/2 | 1.1 | 2.2 | 1.1 | 2.2 | 1.54 | 1.1 | 1.1 | 2.31 | 1.65 | 1.1 |
| | 8204010L | 1/2 | 1.1 | 2.2 | 1.1 | 2.2 | 1.54 | 1.1 | 1.1 | 2.31 | 1.65 | 1.1 |
| | 8204019 | 5/8 | 1.8 | 3.6 | 1.8 | 3.6 | 2..52 | 1.8 | 1.8 | 3.78 | 2.7 | 1.8 |
| | 8204019L | 5/8 | 1.8 | 3.6 | 1.8 | 3.6 | 2.52 | 1.8 | 1.8 | 3.78 | 2.7 | 1.8 |
| | 8204021 | 3/4 | 2.2 | 4.4 | 2.2 | 4.4 | 3.08 | 2.2 | 2.2 | 4.62 | 3.3 | 2.2 |
| | 8204021L | 3/4 | 2.2 | 4.4 | 2.2 | 4.4 | 3.08 | 2.2 | 2.2 | 4.62 | 3.3 | 2.2 |
| | 8204030 | 3/4 | 3.1 | 6.2 | 3.1 | 6.2 | 4.34 | 3.1 | 3.1 | 6.51 | 4.65 | 3.1 |
| | 8204030L | 3/4 | 3.1 | 6.2 | 3.1 | 6.2 | 4.34 | 3.1 | 3.1 | 6.51 | 4.65 | 3.1 |
| | 8204042 | 7/8 | 3.6 | 7.2 | 3.6 | 7.2 | 5.04 | 3.6 | 3.6 | 7.56 | 5.4 | 3.6 |
| | 8204042L | 7/8 | 3.6 | 7.2 | 3.6 | 7.2 | 5.04 | 3.6 | 3.6 | 7.56 | 5.4 | 3.6 |
| | 8204045 | 1 | 4.5 | 9 | 4.5 | 9 | 6.3 | 4.5 | 4.5 | 9.45 | 6.75 | 4.5 |
| | 8204045L | 1 | 4.5 | 9 | 4.5 | 9 | 6.3 | 4.5 | 4.5 | 9.45 | 6.75 | 4.5 |
| | 8204070 | 1 1/4 | 6.8 | 13.6 | 6.8 | 13.6 | 9.52 | 6.8 | 6.8 | 14.28 | 10.2 | 6.8 |
| | 8204125 | 1 1/2 | 10.9 | 21.8 | 10.9 | 21.8 | 15.26 | 10.9 | 10.9 | 22.89 | 16.35 | 10.9 |
| | 8204135 | 2 | 13.6 | 27.2 | 13.6 | 27.2 | 19.04 | 13.6 | 13.6 | 28.56 | 20.4 | 13.6 |

# LIFT SUGGESTIONS

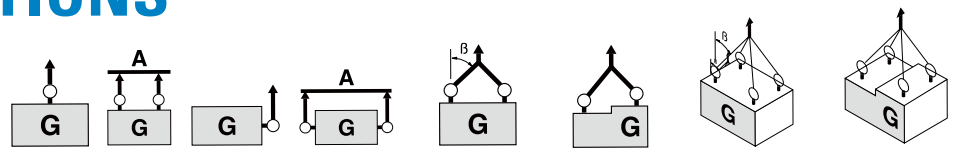


| | | Number of Legs | | 1 | 2 | 1 | 2 | 2 | 2 | 2 | 3-4 | 3-4 | 3-4 |
|---|---|---|---|---|---|---|---|---|---|---|---|---|---|
| | | Load Direction | | 0° | 0° | 90° | 90° | 0-45° | 45°-60° | unsymm | 0-45° | 45°-60° | unsymm |
| | | Item Number | Thread | | WLL (t) | | | | | | | | |
| LIFTING POINT | Metric Thread (8211) | 8211003 | M8 | 0.3 | 0.6 | 0.3 | 0.6 | 0.42 | 0.3 | 0.3 | 0.63 | 0.45 | 0.3 |
| | | 8211006 | M10 | 0.63 | 1.26 | 0.63 | 1.26 | 0.88 | 0.63 | 0.63 | 1.32 | 0.95 | 0.63 |
| | | 8211010 | M12 | 1 | 2 | 1 | 2 | 1.4 | 1 | 1 | 2.1 | 1.5 | 1 |
| | | 8211012 | M14 | 1.2 | 2.4 | 1.2 | 2.4 | 1.7 | 1.2 | 1.2 | 2.5 | 1.8 | 1.2 |
| | | 8211015 | M16 | 1.5 | 3 | 1.5 | 3 | 2.1 | 1.5 | 1.5 | 3.1 | 2.2 | 1.5 |
| | | 8211020 | M18 | 2 | 4 | 2 | 4 | 2.8 | 2 | 2 | 4.2 | 3 | 2 |
| | | 8211025 | M20 | 2.5 | 5 | 2.5 | 5 | 3.5 | 2.5 | 2.5 | 5.2 | 3.7 | 2.5 |
| | | 8211040 | M24 | 4 | 8 | 4 | 8 | 5.6 | 4 | 4 | 8.4 | 6 | 4 |
| | | 8211042 | M27 | 4 | 8 | 4 | 8 | 5.6 | 4 | 4 | 8.4 | 6 | 4 |
| | | 8211050 | M30 | 5 | 10 | 5 | 10 | 7 | 5 | 5 | 10.5 | 7.5 | 5 |
| | | 8211070 | M36 | 7 | 14 | 7 | 14 | 9.8 | 7 | 7 | 14.7 | 10.5 | 7 |
| | | 8211080 | M36 | 8 | 16 | 8 | 16 | 11.2 | 8 | 8 | 16.8 | 12 | 8 |
| | | 8211100 | M42 | 10 | 20 | 10 | 20 | 14 | 10 | 10 | 21 | 15 | 10 |
| | | 8211150 | M42 | 15 | 30 | 14 | 30 | 21 | 15 | 15 | 31.5 | 22.5 | 15 |
| | | 8211200 | M48 | 20 | 40 | 16 | 40 | 28 | 20 | 20 | 42 | 30 | 20 |
| | UNC Thread (8212) | 8212010 | 1/2 | 1 | 2 | 1 | 2 | 1.4 | 1 | 1 | 2.1 | 1.5 | 1 |
| | | 8212015 | 5/8 | 1.5 | 3 | 1.5 | 3 | 2.1 | 1.5 | 1.5 | 3.1 | 2.2 | 1.5 |
| | | 8212020 | 3/4 | 2.5 | 5 | 2.5 | 5 | 3.5 | 2.5 | 2.5 | 5.2 | 3.7 | 2.5 |
| | | 8212025 | 7/8 | 2.5 | 5 | 2.5 | 5 | 3.5 | 2.5 | 2.5 | 5.2 | 3.7 | 2.5 |
| | | 8212040 | 1 | 4 | 8 | 4 | 8 | 5.6 | 4 | 4 | 8.4 | 6 | 4 |
| | | 8212050 | 1 1/4 | 5 | 10 | 5 | 10 | 7 | 5 | 5 | 10.5 | 7.5 | 5 |
| | | 8212080 | 1 1/2 | 8 | 16 | 8 | 16 | 11.2 | 8 | 8 | 16.8 | 12 | 8 |
| | | 8212150 | 1 3/4 | 15 | 30 | 15 | 30 | 21 | 15 | 15 | 31.5 | 22.5 | 15 |
| | | 8212200 | 2 | 20 | 40 | 20 | 40 | 28 | 20 | 20 | 42 | 30 | 20 |
| ANCHOR POINT | Metric Thread (8231) | 8231005 | M8 | 0.8 | 1.6 | 0.5 | 1 | 0.7 | 0.5 | 0.5 | 1.1 | 0.8 | 0.5 |
| | | 8231007 | M10 | 1.2 | 2.4 | 0.7 | 1.4 | 1 | 0.7 | 0.7 | 1.5 | 1.1 | 0.7 |
| | | 8231010 | M12 | 1.5 | 3 | 1 | 2 | 1.4 | 1 | 1 | 2.1 | 1.5 | 1 |
| | | 8231015 | M14 | 2.4 | 4.8 | 1.5 | 3 | 2.1 | 1.5 | 1.5 | 3.2 | 2.3 | 1.5 |
| | | 8231020 | M16 | 3.2 | 6.4 | 5 | 4 | 2.8 | 2 | 2 | 4.2 | 3 | 2 |
| | | 8231025 | M18 | 5 | 10 | 2.5 | 5 | 3.5 | 2.5 | 2.5 | 5.3 | 3.8 | 2.5 |
| | | 8231030 | M20 | 4.5 | 9 | 3 | 6 | 4.2 | 3 | 3 | 6.3 | 4.5 | 3 |
| | | 8231050 | M24 | 9 | 18 | 5 | 10 | 7 | 5 | 5 | 10.5 | 7.5 | 5 |
| | | 8231056 | M27 | 9.5 | 19 | 5.6 | 11.2 | 7.8 | 5.6 | 5.6 | 11.8 | 8.4 | 5.6 |
| | | 8231078 | M30 | 12 | 24 | 7.8 | 15.6 | 10.9 | 7.8 | 7.8 | 16.4 | 11.7 | 7.8 |
| | | 8231125 | M36 | 14 | 28 | 12.5 | 25 | 17.5 | 12.5 | 12.5 | 26.3 | 18.8 | 12.5 |
| | | 8231156 | M42 | 16 | 32 | 15.6 | 31.2 | 21.8 | 15.6 | 15.6 | 32.8 | 23.4 | 15.6 |
| | | 8231200 | M48 | 20 | 40 | 20 | 40 | 28 | 20 | 20 | 42 | 30 | 20 |
| | | 8231220 | M56 | 22 | 44 | 22 | 44 | 30.8 | 22 | 22 | 46.2 | 33 | 22 |
| | | 8231225 | M64 | 22.5 | 45 | 22.5 | 40 | 28 | 20 | 20 | 42 | 30 | 20 |
| | UNC Thread (8232) | 8232010 | 1/2 | 1.2 | 2.4 | 0.8 | 1.6 | 1.12 | 0.8 | 0.8 | 1.68 | 1.2 | 0.8 |
| | | 8232020 | 5/8 | 2.6 | 5.2 | 1.6 | 3.2 | 2.24 | 1.6 | 1.6 | 3.36 | 2.4 | 1.6 |
| | | 8232030 | 3/4 | 3.6 | 7.2 | 2.4 | 4.8 | 3.36 | 2.4 | 2.4 | 5.04 | 3.6 | 2.4 |
| | | 8232038 | 7/8 | 4.5 | 9 | 3 | 6 | 4.2 | 3 | 3 | 6.3 | 4.5 | 3 |
| | | 8232050 | 1 | 7.2 | 14.4 | 4 | 8 | 5.6 | 4 | 4 | 8.4 | 6 | 4 |
| | | 8232078 | 1 1/4 | 9.6 | 19.2 | 6.25 | 12.5 | 8.75 | 6.25 | 6.25 | 13.13 | 9.38 | 6.25 |
| | | 8232125 | 1 1/2 | 11 | 22 | 10 | 20 | 14 | 10 | 10 | 21 | 15 | 10 |
| | | 8232200 | 2 | 16 | 32 | 16 | 32 | 22.4 | 16 | 16 | 33.6 | 24 | 16 |

# LIFT SUGGESTIONS

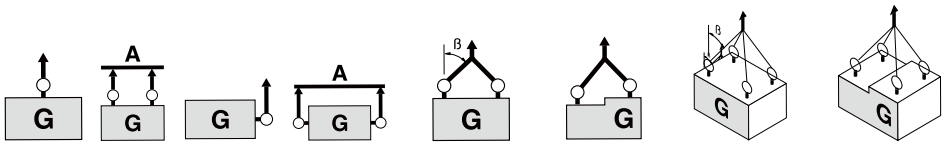


| | Number of Legs | | 1 | 2 | 1 | 2 | 2 | 2 | 2 | 3-4 | 3-4 | 3-4 |
|---|---|---|---|---|---|---|---|---|---|---|---|---|
| | Load Direction | | 0° | 0° | 90° | 90° | 0-45° | 45°-60° | unsymm | 0-45° | 45°-60° | unsymm |
| | Item Number | Thread | | WLL (t) | | | | | | | | |
| SUPER POINT UNC Thread (8251) | 8251007xx | M10 | 1 | 2 | 0.5 | 1 | 0.7 | 0.5 | 0.5 | 1 | 0.75 | 0.5 |
| | | M12 | 1.4 | 2 | 0.7 | 1.4 | 1 | 0.7 | 0.7 | 1.4 | 1 | 0.7 |
| | | M14 | 2 | 4 | 1 | 2 | 1.4 | 1 | 1 | 2.12 | 1.5 | 1 |
| | 8251014xx | M16 | 2.8 | 5.6 | 1.4 | 2.8 | 2 | 1.4 | 1.4 | 3 | 2.12 | 1.4 |
| | | M20 | 3.4 | 6.8 | 1.7 | 3.4 | 2.4 | 1.7 | 1.7 | 3.55 | 2.5 | 1.7 |
| | | M24 | 3.4 | 6.8 | 1.7 | 3.4 | 2.4 | 1.7 | 1.7 | 3.55 | 2.5 | 1.7 |
| | 8251025xx | M20 | 5 | 10 | 2.5 | 5 | 3.55 | 2.5 | 2.5 | 5.3 | 3.75 | 2.5 |
| | 8251040xx | M24 | 8 | 16 | 4 | 8 | 5.6 | 4 | 4 | 8.5 | 6 | 4 |
| | | M30 | 8 | 16 | 4 | 8 | 5.6 | 4 | 4 | 8.5 | 6 | 4 |
| | 8251067xx | M30 | 12 | 24 | 6.7 | 13.4 | 9.5 | 6.7 | 6.7 | 14 | 10 | 6.7 |
| | 8251080xx | M30 | 12 | 24 | 8 | 16 | 11.2 | 8 | 8 | 16 | 12 | 8 |
| | 8251100xx | M36 | 15 | 30 | 10 | 20 | 14 | 10 | 10 | 21.2 | 15 | 10 |
| | 8251125xx | M42 | 15 | 30 | 12.5 | 25 | 17 | 12.5 | 12.5 | 25 | 18 | 12.5 |
| | | M45 | 15 | 30 | 12.5 | 25 | 17 | 12.5 | 12.5 | 25 | 18 | 12.5 |
| | | M48 | 15 | 30 | 12.5 | 25 | 17 | 12.5 | 12.5 | 25 | 18 | 12.5 |
| | 8251170xx | M42 | 20 | 40 | 13 | 26 | 18 | 13 | 13 | 27 | 19 | 13 |
| | | M45 | 25 | 50 | 17 | 34 | 23.5 | 17 | 17 | 35 | 25 | 17 |
| | | M48 | 25 | 50 | 17 | 34 | 23.5 | 17 | 17 | 35 | 25 | 17 |
| | | M56 | 25 | 50 | 18 | 36 | 25 | 18 | 18 | 37.5 | 26.5 | 18 |
| | 8251200xx | M64 | 25 | 50 | 20 | 40 | 28 | 20 | 20 | 42.5 | 30 | 20 |
| | 8251280xx | M72 | 32.5 | 65 | 28 | 56 | 39 | 28 | 28 | 58 | 42 | 28 |
| | | M80 | 32.5 | 65 | 28 | 56 | 39 | 28 | 28 | 58 | 42 | 28 |
| | 8251350xx | M80 | 40 | 80 | 35 | 70 | 49 | 35 | 35 | 74 | 52.5 | 35 |
| | | M90 | 40 | 80 | 35 | 70 | 49 | 35 | 35 | 74 | 52.5 | 35 |
| | 8251400xx | M80 | 50 | 100 | 40 | 80 | 56 | 40 | 40 | 84 | 60 | 40 |
| | | M90 | 50 | 100 | 40 | 80 | 56 | 40 | 40 | 84 | 60 | 40 |
| | | M100 | 50 | 100 | 40 | 80 | 56 | 40 | 40 | 84 | 60 | 40 |
| UNC Thread (8252) | 825200701 | 3/8 | 1 | 2 | 0.5 | 1 | 0.7 | 0.5 | 0.5 | 1 | 0.75 | 0.5 |
| | 825200702 | 1/2 | 1.4 | 2.8 | 0.7 | 1.4 | 1 | 0.7 | 0.7 | 1.4 | 1 | 0.7 |
| | 825201402 | 5/8 | 2.8 | 5.6 | 1.4 | 2.8 | 2 | 1.4 | 1.4 | 3 | 2.12 | 1.4 |
| | 825202501 | 3/4 | 5 | 10 | 2.5 | 5 | 3.55 | 2.5 | 2.5 | 5.3 | 3.75 | 2.5 |
| | 825204002 | 1 | 8 | 16 | 4 | 8 | 5.6 | 4 | 4 | 8.5 | 6 | 4 |
| | 825206702 | 1 1/4 | 12 | 24 | 6.7 | 13.4 | 9.5 | 6.7 | 6.7 | 14 | 10 | 6.7 |
| | 825208002 | 1 1/4 | 12 | 24 | 8 | 16 | 11.2 | 8 | 8 | 16 | 12 | 8 |
| | 825210002 | 1 1/2 | 15 | 30 | 10 | 20 | 14 | 10 | 10 | 21.2 | 15 | 10 |
| | 825212503 | 1 3/4 | 15 | 30 | 12.5 | 25 | 17 | 12.5 | 12.5 | 25 | 18 | 12.5 |
| | 825212505 | 2 | 15 | 30 | 12.5 | 25 | 17 | 12.5 | 12.5 | 25 | 18 | 12.5 |
| | 825217004 | 2 | 25 | 50 | 17 | 34 | 23.5 | 17 | 17 | 35 | 25 | 17 |
| | 825217006 | 2 1/4 | 25 | 50 | 18 | 36 | 25 | 18 | 18 | 37.5 | 26.5 | 18 |
| | 825220001 | 2 1/2 | 25 | 50 | 20 | 40 | 28 | 20 | 20 | 42.5 | 30 | 20 |
| | 825228001 | 2 1/2 | 32.5 | 65 | 28 | 56 | 39 | 28 | 28 | 58 | 42 | 28 |
| | 825235001 | 3 1/2 | 40 | 80 | 35 | 70 | 49 | 35 | 35 | 74 | 52.5 | 35 |

# LIFT SUGGESTIONS

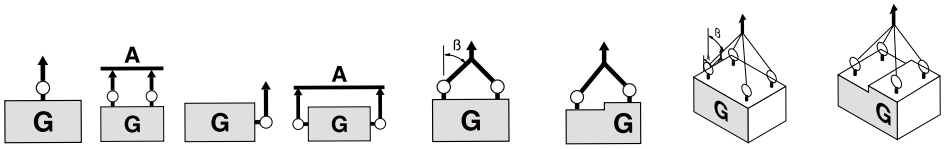


KEY POINT

| | Number of Legs | | 1 | 2 | 1 | 2 | 2 | 2 | 2 | 3-4 | 3-4 | 3-4 |
|---|---|---|---|---|---|---|---|---|---|---|---|---|
| | Load Direction | | 0° | 0° | 90° | 90° | 0-45° | 45°-60° | unsymm | 0-45° | 45°-60° | unsymm |
| | Item Number | Thread | | WLL (t) | | | | | | | | |
| Metric Thread (8291) | 8291K003 | M8 | 1 | 2 | 0.3 | 0.6 | 0.42 | 0.3 | 0.3 | 0.63 | 0.63 | 0.3 |
| | 8291K004 | M10 | 1 | 2 | 0.4 | 0.8 | 0.56 | 0.4 | 0.4 | 0.84 | 0.84 | 0.4 |
| | 8291K007 | M12 | 2 | 4 | 0.75 | 1.5 | 1 | 0.75 | 0.75 | 1.58 | 1.58 | 0.75 |
| | 8291K015 | M16 | 4 | 8 | 1.5 | 3 | 2.1 | 1.5 | 1.5 | 3.15 | 3.15 | 1.5 |
| | 8291K023 | M20 | 6 | 12 | 2.3 | 4.6 | 3.2 | 2.3 | 2.3 | 4.8 | 4.8 | 2.3 |
| | 8291K032 | M24 | 8 | 16 | 3.2 | 6.4 | 4.5 | 3.2 | 3.2 | 6.7 | 6.7 | 3.2 |
| | 8291K045 | M30 | 12 | 24 | 4.5 | 9 | 6.3 | 4.5 | 4.5 | 9.4 | 9.4 | 4.5 |
| | 8291K070 | M36 | 16 | 32 | 7 | 14 | 9.8 | 7 | 7 | 14.7 | 14.7 | 7 |
| | 8291K090 | M42 | 24 | 48 | 9 | 18 | 12.6 | 9 | 9 | 18.9 | 18.9 | 9 |
| | 8291K120 | M48 | 32 | 64 | 12 | 24 | 16.8 | 12 | 12 | 25.2 | 25.2 | 12 |
| | 8291K140 | M56 | 34 | 68 | 16 | 32 | 22.4 | 16 | 16 | 33.6 | 33.6 | 16 |
| | 8291K150 | M64 | 36 | 72 | 18 | 36 | 25.2 | 18 | 18 | 37.8 | 37.8 | 18 |
| UNC Thread (8292) | 8292K003 | 5/16 | 1 | 2 | 0.3 | 0.6 | 0.42 | 0.3 | 0.3 | 0.63 | 0.45 | 0.3 |
| | 8292K004 | 3/8 | 1 | 2 | 0.4 | 0.8 | 0.56 | 0.4 | 0.4 | 0.8 | 0.6 | 0.4 |
| | 8292K007 | 1/2 | 2 | 4 | 0.75 | 1.5 | 1 | 0.75 | 0.75 | 1.5 | 1.1 | 0.75 |
| | 8292K015 | 5/8 | 4 | 8 | 1.5 | 3 | 2.1 | 1.5 | 1.5 | 3.1 | 2.2 | 1.5 |
| | 8292K023 | 3/4 | 6 | 12 | 2.3 | 4.6 | 3.2 | 2.3 | 2.3 | 4.8 | 3.4 | 2.3 |
| | 8292K025 | 7/8 | 6 | 12 | 2.3 | 4.6 | 3.2 | 2.3 | 2.3 | 4.8 | 3.4 | 2.3 |
| | 8292K032 | 1 | 8 | 16 | 3.2 | 6.4 | 4.5 | 3.2 | 3.2 | 6.7 | 4.8 | 3.2 |
| | 8292K045 | 1 1/4 | 12 | 24 | 4.5 | 9 | 6.3 | 4.5 | 4.5 | 9.4 | 6.7 | 4.5 |
| | 8292K070 | 1 1/2 | 16 | 32 | 7 | 14 | 9.8 | 7 | 7 | 14.7 | 10.5 | 7 |
| | 8292K090 | 1 3/4 | 24 | 48 | 9 | 18 | 12.6 | 9 | 9 | 18.9 | 13.5 | 9 |
| | 8292K120 | 2 | 32 | 64 | 12 | 24 | 16.8 | 12 | 12 | 25 | 18 | 12 |

**With tens of thousands of products to choose from, DME is your one-stop shop for everything molding.** From complex undercuts solutions and plate control to standard pins, bushings and interlocks, the DME line of mold components will help you build or rebuild your mold base inside out, top to bottom. Industrial Supplies, Mold Bases, MUD Quick-Change, Control Systems, and Hot Runner solutions round out our extensive offering to truly be your one-stop shop.

eSTORE
store.dme.net

**DME Company LLC**
42827 Irwin Drive
Harrison Twp., MI 48045
800-626-6653 *toll-free tel*
248-398-6000 *tel*
www.DME.net *web*
DME@DME.net e-mail

**DME Canada**
41 Todd Road
Georgetown, Ontario
Canada L7G 4R8
800-387-6600 *toll-free tel*
905-677-6370 *tel*
DME_Canada@DME.net e-mail

**DME Mexico / South America**
Circuito el Marques Notre, No.55
Parque Industrial El Marqués
El Marqués, Querétaro, CP 76246
52.442.670.2723/2710 tel
DME_MX@dme.net

© DME Company 2026
Printed in U.S.A

YOKE-2.11.26